Check for updates

Original Article

IJEEE

International Journal of Electrical Engineering & Education
0(0) 1–16
© The Author(s) 2020
Article reuse guidelines:
sagepub.com/journals-permissions
DOI: 10.1177/0020720920926679
journals.sagepub.com/home/ije
SAGE

Remote laboratory trends for Distance Vocational Education and Training (D-VET): A real-time lighting application

Zuhal Polat[1] **and Nazmi Ekren**[2]

Abstract

This research presents a web-based lighting laboratory infrastructure that allows students to access and control application tools in lighting technology education through online real-time equipment. Designed for Distance Vocational Training and Education, this system uses the LabVIEW Virtual Instrumentation Program to control lighting levels. In this program, the interface developed allows students to control and monitor applications online using cameras, sensors, and controllers. In the modeled system, the lighting levels of LED lamps are controlled through PID controllers. Furthermore, a web page was designed that provides synchronized (simultaneous) access to application instrumentation for the students. Each user can run applications in a specific period through this website. Students can also monitor the lighting level of the laboratory in real-time with a webcam. Individual storage of the data obtained in the model also supports conducting necessary analyses. Students can strengthen their theoretical knowledge by running lighting technique experiment applications with real equipment in the Distance Vocational Training and Education. In the evaluation part of the research, the answers are given by the students (95%) also stated that they increased the theoretical knowledge of doing remote experiments. In total 98.5% of students believe that the ability to repeat experiments anywhere in this system will accelerate the learning process.

[1]Vocational School of Technical Sciences, Marmara University, Istanbul, Turkey
[2]Faculty of Technology, Marmara University, Istanbul, Turkey

Corresponding author:
Zuhal Polat, Vocational School of Technical Sciences, Marmara University, Istanbul, Turkey.
Email: zuhalpolat@marmara.udu.tr

Keywords
Remote laboratory, web-based laboratory, LabVIEW, Distance Vocational Education and Training (D-VET), lighting

Introduction

Rapidly developing technology improves people's quality of life around the world. In this context, distance education systems are one of the most significant opportunities facilitated by technology in terms of the adaptability and equal opportunities they provide. Distance systems, which make education independent from time and space, offer quick access to information.

Educational facilities delivered by distance education also make immense contributions to traditional education, provide different education methods, and address individual differences in learning. Minimizing the educational costs and offering equal opportunities under similar circumstances are additional contributions to the distance education system. This system eliminates the need for students to be present in the class or laboratory at a specific time and offers a freer educational environment by promoting self-learning.[1]

The industry needs experts who can effectively use their theoretical knowledge and expertise in practice. The responsibility for meeting this demand falls upon universities that offer programs on technology. For this purpose, many universities are now making an effort to extend the practical experiences of their students.[2] Laboratory studies are a significant part of technical and vocational education, specifically.[3]

In recent years, utilizing the developments in network and web technologies in engineering disciplines has paved the way for web-based laboratories that enable students to perform online laboratory studies. In the Distance Vocational Training and Education (D-VET) field, two separate options are available for developing laboratories: virtual laboratories and remote laboratories. In virtual labs, students gain access to computer-simulated processes.[4] On the other hand, remote labs, despite being more complex and costly, provide the ability for students to work with actual data rather than simulated ones, which can motivate students more. Remote laboratories provide remote access to devices with web-based actual setups. They are composed of applications that enable students to directly perform experiments in "live" labs with real equipment, without actually being in the laboratory.[5] Remote labs offer solutions to various problems such as insufficient financial resources, lack of qualified personnel, limitations on implementation spaces and time, crowded classrooms, security issues, and maintenance.[6]

Real-time remote labs can easily be equipped with new technology on remote panels of LabVIEW virtual instrumentation software by National Instruments. The LabVIEW can simply and rapidly provide the front panel of the program to the user for use on a standard web browser.[7]

In this study, we aimed to enable each student to run the applications remotely at certain time intervals to monitor, control, and record data for later analysis.

Literature review

Some remote-access laboratory studies have been conducted with the LabVIEW Virtual Instrumentation program. In a recent study published by Singh et al., a remote-access lab was developed for engineering students using LabVIEW software. The laboratory offered capabilities for an LM35 sensor, LDR, and photodiode experiments, as well as permanent magnet DC engine control and revolution measurement. The analog data obtained from sensors placed in real experimental setups were digitally converted, then monitored with LabVIEW software using a data acquisition (DAQ) card, which in turn allowed the required values to be processed. The results from remote access laboratory measurements were then compared with values given by the manufacturer, and successful results were achieved. The system, offered as a user-friendly virtual instrumentation lab, used LabVIEW, Dreamweaver, Orcad, and Micro Compiler software. The study also claimed that the lab in which the authors designed DAQ cards provided cost advantages when compared to similar studies in the literature.[8]

A new dimension in monitoring and analyzing a power system, the phasor unit of measurement, was researched by Mondal et al. Repetitive and non-repetitive discrete Fourier transform phasor estimation algorithm simulations were implemented with LabVIEW. An advanced LabVIEW algorithm was integrated with LabVIEW-compatible data collection systems such as NI ELVIS kit and used for real-time estimation of the phasor.[9] The system developed by Gautam and Pahuja contains a web-based and remotely controlled laboratory where transducer-based experiments can be conducted as part of the curricula of instrumentation and control engineering and related fields. Graphic interfaces were then developed that gave the characteristics of transducer systems capable of measuring speed by using a linear variable differential transformer and an optic sensor. It was reported that the virtual laboratory developed provided access opportunities for real users without any time limitations, as well as real-time monitoring capabilities, and hence achieved pedagogically favorable results.[10] Another recent study introduces a new web-based virtual laboratory called SHRIMP VL to help teach the Precision High Resolution Ion Micro Probe (SHRIMP) application. This virtual laboratory is specifically designed to help learn the operational process procedure. The virtual laboratory includes a virtual experiment platform to simulate the experimental procedure of real instruments and show the results of the experiment. SHRIMP VL has been successfully implemented in Jilin University's undergraduate and graduate education since 2017 and provided students with an instrument learning platform for SHRIMP and online learning with realistic simulations. In the spring term of 2018, 78 master students using SHRIMPVL for experimental training were given a questionnaire form based on the An Modern Analytic Test Technology experiment in the field of geological expertise provided by Jilin

University. Evaluation results of the study show that SHRIMP VL is a suitable teaching tool for SHRIMP experiments, which reduces the on-site instrument training time and provided multiple trial periods for scientific analysis.[11] The EDUMEC project provided remote access to a laboratory established in the field of mechatronics at Marmara University. Users can do mechatronic experiments by making real-time access to the EDUMEC laboratory. Besides, the EDUMEC platform has 50 different courses in an asynchronous format.[12] In another platform called RLab, students were provided with a web-based programmable logic controller (PLC) to control the tank level remotely.[13]

Another study conducted using equipment called "RedPitaya" presents the remote laboratory experiments of Analog Electronics.[14] Likewise, a different study was conducted in the Mechatronic Laboratory of Trakya University, Ipsala Vocational School, which offered remote access and control for a mechatronic system composed of six different stations.[15] Real games designed a three-dimensional, virtual PLC engineering laboratory environment for Mississippi State University Mechanical Engineering (ME) students. A virtual PLC called Factory I/O is a factory simulation created to train students. This simulation includes many physical properties such as gravity, force, mass, and friction between surfaces created simultaneously. The approach of the students who run the software to PLC education has been extremely positive.[16] Han Wan designed a remote controlled web-based field-programmable gate array (FPGA) laboratory application for the Computer Organization course. The project is designed for entry-level users. Between the Fall 2016 and Fall 2017 semesters, some findings emphasized the improvement of students' participation, learning, and success.[17] Odema, Adly, and Ghali designed a laboratory that used NI myRIO for distance education of university students. In this laboratory, students performed magnetic brake tests with distance education modules.[18] There are also several studies in the literature that use LabVIEW programming language.[19–25]

When the literature was examined, it was seen that a case study that could perform the lighting course application remotely and could see the results instantly, had not been done before. The study carried out in this context makes an essential contribution to the literature.

Hardware construction of the study

Within the context of this study, a multi-user, real-time remote lab system was designed that allowed students to change the control parameters of the lighting technology experiments using LabVIEW.

The system was equipped with LED lamps, and proportional integral derivative (PID) controllers were used to allow users to alter the control system parameters online, observe the changes, and record the data.

The wiring diagram of the experimental setup created for real-time implementation of the applications and the equipment included in the system are shown in Figure 1. The server computer, located in the D-VET, used an Ethernet card to

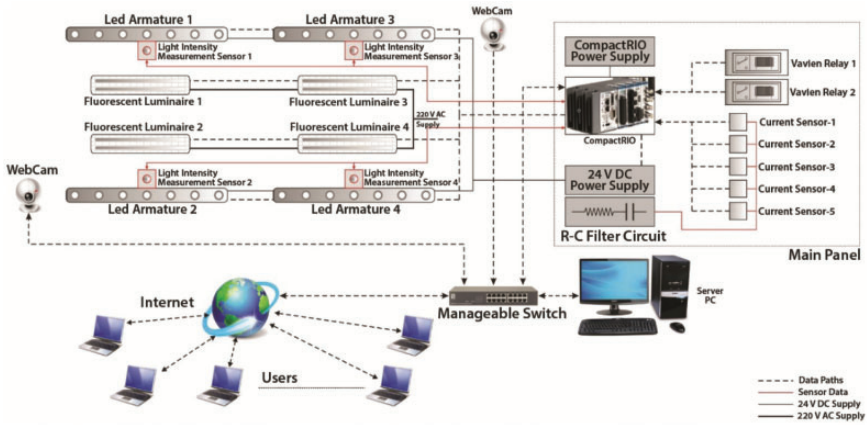

Figure 1. Wiring diagram of the experimental setup.

allow for the remote control of the whole system by transferring the applications created with the server feature to the Internet environment. A webcam with a USB connection was used for real-time access. NI-IMAQ software was installed on the computer in order to obtain the images. The laboratory image was transferred to the front panel of the LabVIEW program. Then, to ensure direct and proper communication between the various nodes (network connection points) on the network, switches were used. Finally, compact reconfigurable input output (CompactRIO) and the server computer were connected to the switch to secure the control of the whole system through the network. CompactRIO is a kind of commercial DAQ system, which is developed by National Instruments.

The light sensor used in the system gives an output voltage of 0–10 V DC. The measurement range is 0.02–2 klux. The data from the light sensors were connected to the analog inputs of the CompactRIO. The light flux of all the LED lamps in the system was measured. To be able to calculate the power consumption of the lighting devices, the amount of current withdrawn from the line needed to be known. For this data, five hall current sensors were connected first to the line in series, then to the analog input of the CompactRIO device. The measured values from the sensors are used for power calculations. The lighting system can be controlled both manually and with a computer using a two-way switch.

The architecture of the CompactRIO is shown in Figure 2. For real-time control, the system also has a processor that runs a real-time operating system working on LabVIEW.[26] Users can directly access each of the I/O modules of CompactRIO hardware using LabVIEW FPGA basic I/O functionality. They can handle even the most complex tasks simple and flexibly.[27]

Control of the devices (LEDs, fluorescents, etc.) connected to the analog input unit of the NI CompactRIO 9075 is accomplished by transferring data from the analog output unit (current sensor, light sensor, etc.) to the server. It then becomes

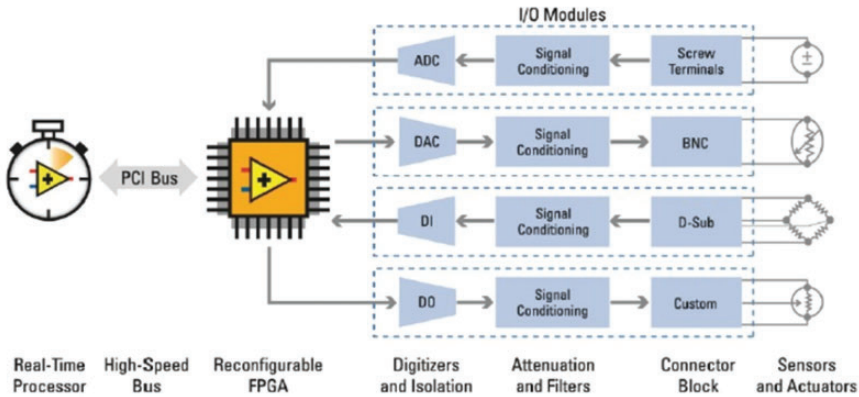

Figure 2. CompactRIO architecture.

possible to conduct experiments via the virtual instruments (VIs) created by using the LabVIEW program with the signals transferred to the server computer.

To be able to run a CompactRIO system in LabVIEW FPGA interface mode, the LabVIEW FPGA module should be installed on the main computer.[28] The LabVIEW FPGA interface mode is shown in the Project Explorer window under the FPGA main element, and the I/O channels are located under the FPGA target as FPGA I/O elements (Figure 3).

Software construction of the study

LabVIEW uses VIs as programming units. A LabVIEW VI is composed of a front panel called the user interface and a block diagram that contains functions and connection panels for controlling the functions in the front panel.[29] Figure 4 shows the user interface (front panel) window of the applied system and Figure 5 shows the block diagram. In the implementation of the application, the control, measurement (indicators, graphics), and system image components are created in the front panel. The front panel also displays the experiment process steps and provides relevant guidelines for experimenting.

In this study, control of the lighting laboratory was achieved with a PID controller. Closed cycle PID control systems have long been the top choice in practical applications because of their simplicity and effectiveness; they are a commonly used and preferred method in the field of control systems. Despite the wide application range, there is no standard definition for PID applications.

Figure 6 shows that the process and control unit are connected inside a feedback cycle. The purpose of the system is to keep the desired value and process variable close despite the irregularity; this ensures the feedback cycles work, as shown above.[30]

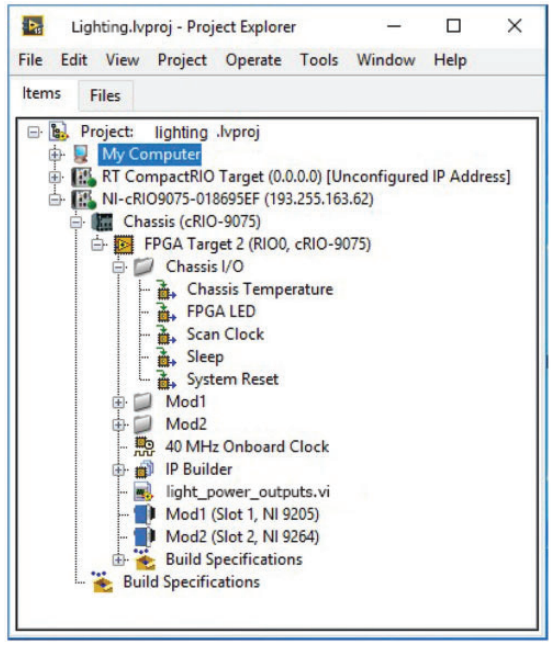

Figure 3. Project window containing the modules in FPGA interface mode.

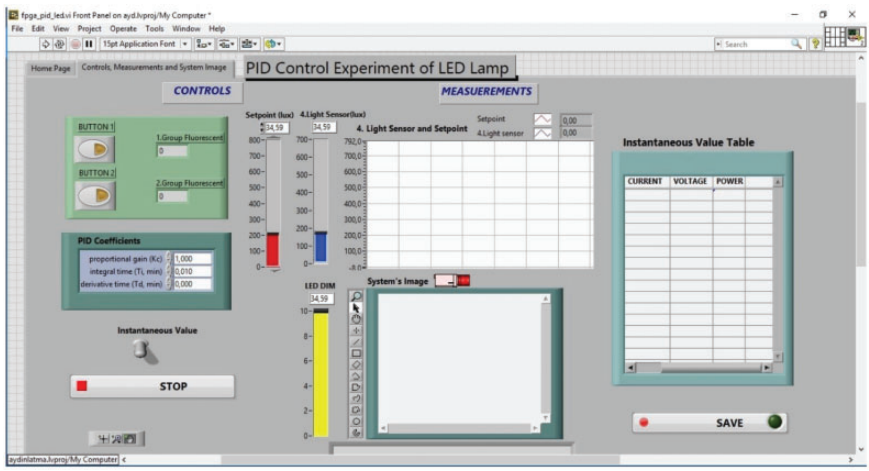

Figure 4. User interface (front panel) of the LabVIEW system.

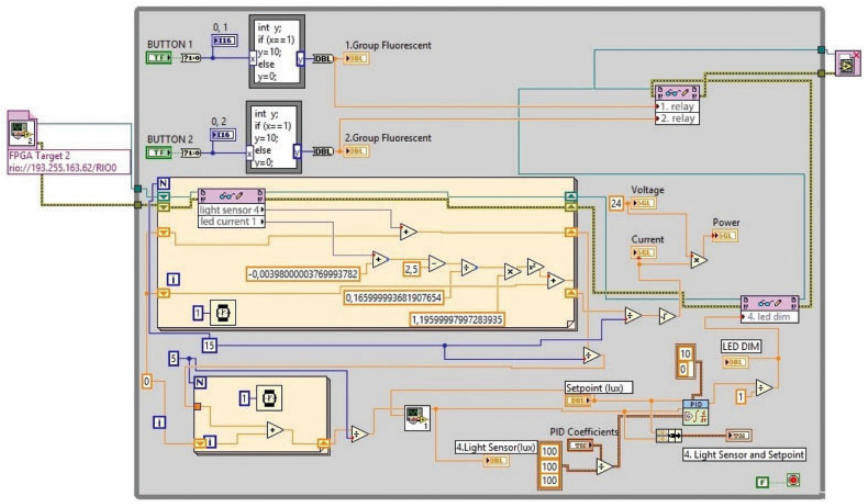

Figure 5. User block diagram from the LabVIEW system.

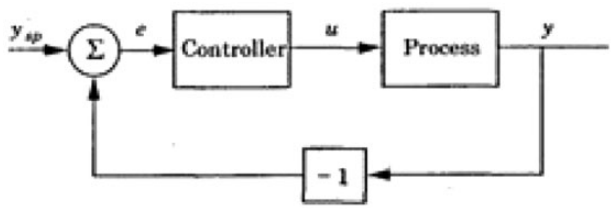

Figure 6. A simple feedback system's block diagram.

According to Karl Astrom, the PID algorithm is as follows

$$u(t) = K\left[e(t) + 1/T_i \int_0^t e(\tau)d\tau + T_d \frac{de(t)}{dt}\right] \tag{1}$$

$$e(t) = r(t) - y(t) \tag{2}$$

Here $u(t)$ is the control variable, $e(t)$ is the summing point, and $y(t)$ is the measured value.

K, Ti, and Td are PID parameters. To simplify the above formula

$$u(t) = P(t) + I(t) + D(t) \tag{3}$$

P: proportional, I: integral, D: differential.

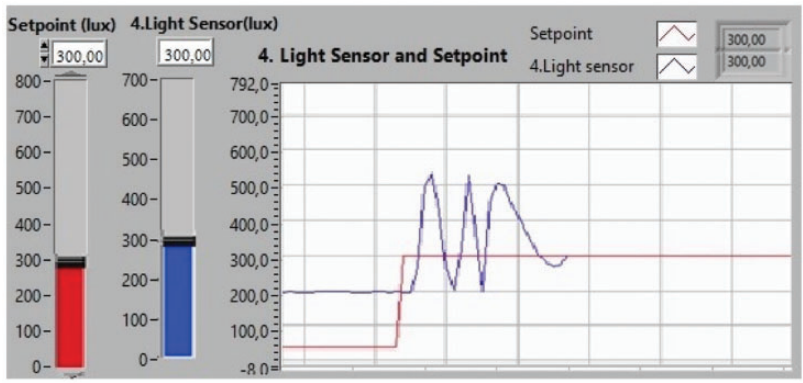

Figure 7. Process set value and process variable graphic.

In the front panel, users can run the system according to the guidelines given on the experiment process steps page. Components that require adjustments by the user in the controller section are:

- The coefficients of the PID controller,
- Set value of the PID controller,
- Button1 and Button2 for distorting light effect.

For controlling the system, the user, in the first step after running the application, sets the desired light flux value (set value) in the workspace in units of lux with the cursor (for instance, 300 lux.). In the second step, the coefficients of the PID controller are changed at specific intervals. These adjust the process variable of the PID controller (based on the value from the light sensor) to the desired set value. Figure 7 shows the PID set value for a light flux of 300 lux and the graphics of the process variable.

In addition to this, the current withdrawn by the system corresponding to the set value and power ratings calculated from this current can be read from the "Instantaneous Value Table". Button1 and Button2 are used as distorting light effects for the lighting control of the system. Using distorting light effects enables the user to monitor the changes in the behavior of the system according to the set PID coefficients.

LabVIEW VIs: Image transfer of the application

In order to obtain the images by a webcam, NI-IMAQ software was installed on the computer, and the lab image was transferred to the front panel of the LabVIEW program (Figure 8). This setup allowed users to monitor the system's

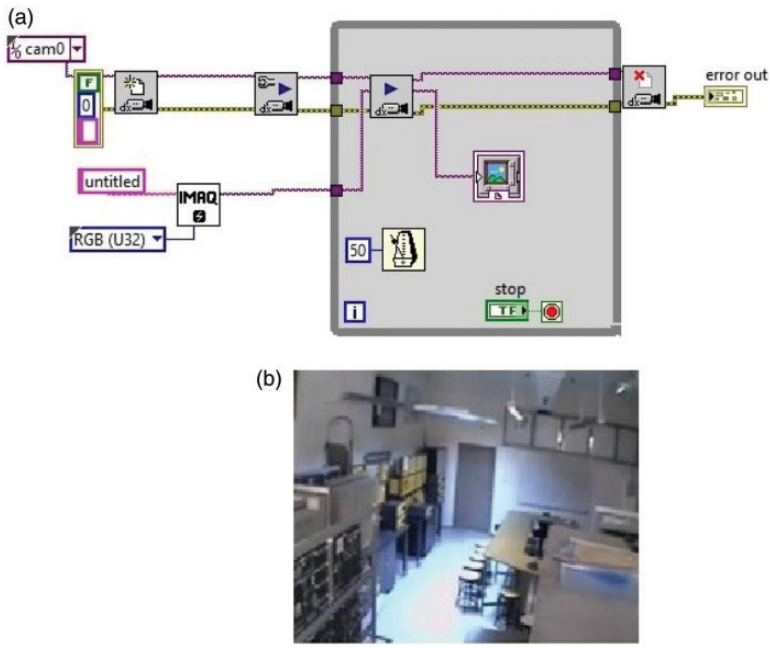

Figure 8. Real-time image of the system: (a) WebCam block diagram, (b) the system's image with WebCam.

images (changes in lighting intensity) for parameter changes and to have more control over the application (see Figure 8(a) and (b)).

Publishing the applications on the web

Remote access to LabVIEW VIs was achieved with remote panels. In the program, users can monitor the VIs using the web publishing tool and publish it to the webserver for control. Remote access by the client has accomplished Internet Explorer web browser; a browser plug-in is needed for the client to run LabVIEW VIs. Remote access by the client is done through the Internet Explorer web browser. The client does not need to install LabVIEW on his computer to run LabVIEW VIs. Simply install a browser extension (Vision Development Module Run-Time Engine) and have an Internet connection.

A website is designed to ensure users have synchronous access to the actual experimental instrumentation. Users first log in to the system with a user name and password on the application tab of the web page. They then make an appointment through the system to specify a certain date and time for each application. The system gives each user a 30-min time period on the selected date to run the



Figure 9. Web interface for lighting application: (a) application page, (b) user login screen.

application. In this time slot, the user can run the application selected. The web interface designed for lighting control is shown in Figure 9(a) and (b).

Evaluation of the D-VET and student feedback

D-VET is introduced to 40 students taking lighting technique classes in the spring term of the 2018–2019 academic year. Later, these 40 students were allowed to use

Table 1. Questionnaire results about the D-VET systems.

Questions	Responses					AVE	SD
	1	2	3	4	5		
User friendly							
Q1: Using the "remote access system" is easy.	25 (62.5%)	10 (25%)	2 (5%)	1 (2.5%)	2 (5%)	1.63	1.05
Q2: Elements of the user interface are clearly indicated.	30 (75%)	6 (15%)	3 (7.5%)	0	1 (2.5%)	1.40	0.84
Q3: The system is unnecessarily complicated.	1 (2.5%)	0	4 (10%)	14 (35%)	21 (52.5%)	4.35	0.86
Q4: There are many inconsistencies in the system.	3 (7.5%)	4 (10%)	10 (25%)	0	23 (57.5%)	4.25	1.15
Q5: Technical assistance is required to be able to use this system.	8 (20%)	5 (12.5%)	12 (30%)	10 (25%)	5 (12.5%)	2.98	1.31
Q6: D-VET tools are simple and clear.	28 (70%)	8 (20%)	3 (7.5%)	0	1 (2.5%)	1.45	0.85
Functionality/Accessibility							
Q7: Ability to graphically monitor the results helped me understand the experiment results better.	26 (65%)	10 (25%)	3 (7.5%)	0	1 (2.5%)	1.50	0.85
Q8: Ability to record the results helped me understand the experiment results better.	30 (75%)	7 (17.5%)	2 (5%)	0	1 (2.5%)	1.38	0.81
Q9: Experiment steps are clearly indicated.	29 (72.5%)	8 (20%)	2 (5%)	0	1 (2.5%)	1.40	0.81
Q10: Real-time instruments are well-designed.	24 (60%)	14 (35%)	1 (2.5%)	0	1 (2.5%)	1.5	0.78
Q11: The system's ability to remotely access laboratory is simple.	29 (72.5%)	7 (17.5%)	3 (7.5%)	0	1 (2.5%)	1.43	0.84
Learning and cognitive perspective							
Q12: When I use the program, I believe my personal skills are improved.	27 (67.5%)	10 (25%)	1 (2.5%)	1 (2.5%)	1 (2.5%)	1.48	0.88
Q13: I found it useful in reinforcing theoretical knowledge.	29 (72.5%)	9 (22.5%)	1 (2.5%)	0	1 (2.5%)	1.38	0.77
Q14: D-VET helped me understand the basic concepts of lighting control.	26 (65%)	11 (27.5%)	2 (5%)	0	1 (2.5%)	1.48	0.82
Q15: I think remote preparation facilitates the applied work in the laboratory.	27 (67.5%)	10 (25%)	2 (5%)	0	1 (2.5%)	1.45	0.81
Q16: Remote access to real-time tools motivated me for laboratory work.	27 (67.5%)	8 (20%)	4 (10%)	0	1 (2.5%)	1.45	0.88
Q17: Ability to conduct the experiments more than once with D-VET helped my learning.	26 (65%)	12 (30%)	1 (2.5%)	0	1 (2.5%)	1.45	0.78
Q18: D-VET experiments simplified PID applications.	23 (57.5%)	14 (35%)	2 (5%)	0	1 (2.5%)	1.55	0.81

1 = Strongly Agree, 2 = Agree, 3 = Undecided, 4 = Disagree, 5 = Strongly Disagree.

the D-VET system. At the end of this practice, the students were asked to complete a survey that has five sub-scales. Table 1 shows the comments of the students.

After using the program, students were asked to complete a survey on the D-VET system composed of 18 questions developed by using a Likert scale of 5 as well as an open-ended question to convey their opinions. The scale is: 1 = Strongly Agree, 2 = Agree, 3 = Undecided, 4 = Disagree, 5 = Strongly Disagree. The students' responses were analyzed in PSPP open software statistical program. Then, a frequency test was applied to the survey responses to analyze their significance levels and standard deviations. For the student survey of the D-VET system, the Cronbach alpha value of reliability analysis was calculated as 0.87 (a value larger than 0.7 indicates the reliability of the analysis[31]). A scale reliability coefficient of 0.87 indicates that the survey's internal consistency reliability is high.

According to the survey results, the majority of students (97.5%) participating in remote access experimental applications believe that remote preparation facilitates the applied operations. Therefore, it can be argued that implementation in an actual laboratory environment is highly beneficial for students in terms of both individual practice and immediate access to the results. Ninety-five percent of the students who participated in the D-VET experimental application regarded the experience positive. The D-VET helped the students re-study the subjects, which in turn gave them a chance to develop their skills. They also claimed that there was an increase in their theoretical knowledge. In total 98.5% of the participants believe that the ability to repeat the experiments anytime anywhere in this system will accelerate the learning process. This system allows each student to find the opportunity to learn at his own pace. D-VET also gives the students a chance to compensate for the missed classes (due to sickness, time conflicts, etc.). Students, in general, stated that using the D-VET system was easy (87.5%), it improved learning more effectively and efficiently, and they believed that it is safer than an actual laboratory environment. Opinions between Q1 and Q6 indicate that the majority of the students are satisfied with the user interface of D-VET (90%), and its use is simple and clear (90%). Furthermore, according to the opinions between Q7 and Q11, more than 90% of the students think the D-VET works as a useful tool in learning since it records the results and ensures graphical monitoring. Smartphones are being used extensively, and many college students use mobile apps. These mobile devices make it possible for students to share lecture notes among themselves or access/monitor these notes through apps, which significantly facilitates learning.[32–34] The students who participated in the survey suggested that access to the system should not only take place via a computer but also via mobile phones. This study will act as a significant reference to develop mobile apps for future research.

Conclusions

Remote labs for interacting with physical systems are robust tools that allow students to reinforce their theoretical knowledge by running applications with

actual equipment in a web environment, similar to what is found in an industrial setting. Web-based training materials and laboratories designed with user-friendly software and technological tools provide a solution to the limitations of traditional labs. These also meet students' needs for labs in fields engineering, technology, and technical education.

D-VET provides a student-centered education approach that provides students with equal opportunities. In this system designed for D-VET, students using the LabVIEW virtual instrumentation program can control and monitor the lighting technique lab equipment via the web. With this system, vocational education students are now able to conduct experiments in real-time with their computers, from anywhere and anytime, with low costs.

In addition to the LabVIEW program, a website was designed to ensure synchronous access to the actual experiment instrumentation for users. On this website, students log in to the appointment system and control separate experiments simultaneously at their given time slot. Users can also monitor the operation in real-time through a webcam. The system allows for personal data storage and supports the necessary analyses.

Declaration of conflicting interests

The author(s) declared no potential conflicts of interest with respect to the research, authorship, and/or publication of this article.

Funding

The author(s) disclosed receipt of the following financial support for the research, authorship, and/or publication of this article: This research was supported by Marmara University Scientific Research Projects Commission (BAPKO) (Project No: FEN-C-DRP 91212-0360).

ORCID iDs

Zuhal Polat https://orcid.org/0000-0002-0234-4662
Nazmi Ekren https://orcid.org/0000-0003-3530-9262

References

1. Zeki K and Seref T. New trends of measurement and assessment in distance education. *Turk Online J Distance Educ* 2014; 15: 206–217.
2. Gamble J. Why improved formal teaching and learning are important in technical and vocational education and training (TVET). In: *Revisiting global trends in TVET: Reflections on theory and practice*. Vol. 204, 2013.
3. Popović B, Popović N, Mijić D. , et al. Remote control of laboratory equipment for basic electronics courses: a LabVIEW-based implementation. *Comput Appl Eng Educ* 2013; 21: E110–E120.
4. Tekin A, Ata F and Gökbulut M. Remote control laboratory for DSP-controlled induction motor drives. *Comput Appl Eng Educ* 2012; 20: 702–712.

5. Hu W, Liu G-P and Zhou H. Web-based 3-D control laboratory for remote real-time experimentation. *IEEE Trans Ind Electron* 2013; 60: 4673–4682.
6. Yabanova I, et al. Designing a real-time remote control system for undergraduate engineering and engineering technology students. *JET* 2016; 33: 34.
7. Singh AK, et al. Remote lab in instrumentation and control engineering using LabVIEW. *IJEEE* 2014; 3: 297–304.
8. Singh A, et al. Remote lab in instrumentation and control engineering using LabVIEW. *IJEEE* 2015; 3.
9. Mondal S, et al. Simulation of phasor measurement unit (PMU) using LABview. In: *14th international conference on environment and electrical engineering (EEEIC)*, Krakow, Poland 2014. IEEE
10. Gautam V and Pahuja R. Web-enabled simulated and remote control virtual laboratory of transducer. *IJMECS* 2015; 7: 12.
11. Liu YH, et al. A web-based virtual laboratory for SHRIMP. *Comput Appl Eng Educ* 2018; 26: 1493–1506.
12. Ak A, et al. Development of a remote laboratory infrastructure and LMS for mechatronics distance education. *Eurasia J Math Sci Technol Educ* 2018; 14: 2493–2508.
13. Haritman E, et al. A remote PLC laboratory (RLab) for distance practical work of industrial automation. In: *IOP conference series: materials science and engineering*. Bristol: IOP Publishing, 2018.
14. García-Orellana CJ, et al. Remote laboratory experiments of Analog Electronics based on. 'RedPitaya'. In: *Technologies applied to electronics teaching (TAEE)*. Piscataway, NJ: IEEE, 2016.
15. Güllü A, Aki O and Kuşçu H. Remote access for education and control of mechatronics systems. *Procedia Soc Behav Sci* 2015; 176: 1050–1055.
16. Spayde DL, Green MK and Kinard KR. Student response to the introduction of programmable logic controllers through the use of a virtual engineering laboratory environment, In: *ASEE Southeastern Section Conference*, 2019.
17. Wan H, et al. A web-based remote FPGA laboratory for computer organization course. In: *Proceedings of the 2019 on Great Lakes symposium on VLSI*, 2019. ACM Digital Library.
18. Odema M, Adly I and Ghali HA. LabVIEW-based interactive remote experimentation implementation using NI myRIO. In: *2019 International Conference on Innovative Trends in Computer Engineering (ITCE)*, 2019. IEEE Xplore.
19. Meng L, et al. Luminosity measurement of street lighting and its data processing system. *J Dalian Polytech Univ* 2012; 31: 71–74.
20. Hamed B. Design & implementation of smart house control using LabVIEW. *IJSCE* 2012; 1: 98–106.
21. Song J and Zhang Y. Design and implementation of a ship's lighting control system based on LABVIEW. *Appl Sci Technol* 2011; 12: 011.
22. Jin M-L and Ho M-C. Labview-based fuzzy controller design of a lighting control system. *J Mar Sci Technol* 2009; 17: 116–121.
23. Andrei H, et al. Measurement analysis of an advanced control system for reducing the energy consumption of public street lighting systems. In: *PowerTech 2009*, 2009. Bucharest: IEEE.
24. Saravanan R. Fuzzy controller design of lighting control system by using VI package. *IAES Int J Artif Intell* 2012; 1: 73.

25. Yu L, Liu Z and Wang N. Virtual experimental system of intelligent lighting based on LabVIEW. *Mod Archit Electr* 2012; 8: 020.
26. Maire G, et al. Evaluation and implementation of advanced process control with the compactRIO Material of National Instrument, 2014.
27. Qiu X-J, et al. The test verification design method based on rapid prototyping technology of aero-engine. *Procedia Eng* 2015; 99: 981–990.
28. LabVIEW ile Programlama, http://www.kilicaslan.nom.tr/labview/LabVIEW.pdf (2014, accessed June 2014).
29. El-Hajjar M, Maunder R and Ng S. Introduction to LabVIEW, 2012.
30. Astrom KJ, et al. Automatic tuning and adaptation for PID controllers – a survey. *Adapt Syst Control Signal Process* 1993; 8: 371–376.
31. George D and Mallery M. Using SPSS for Windows step by step: a simple guide and reference, 2003.
32. Odabasi F. Computer assisted education In: YHoscan (ed.). Faculty of Open Education Primary Education Undergraduate Program Eskisehir: Anadolu University Publications, 1998.
33. Isman A. Computer and education. *Journal of Sakarya University Faculty of Education*, 2001; 2: 1–34.
34. Engin AO, Tösten R and Kaya MD. Computer assisted education. Journal of Kafkas University Institute of Social Sciences 2010; 1: 69–80.