FORKLİFT ÇATALLARININ TASARIM, ANALİZ VE TEST SÜREÇLERİNİN BÜTÜNLEŞİK OLARAK DEĞERLENDİRİLMESİ

INTEGRATED EVALUATION OF FORKLIFT FORK DESIGN, ANALYSIS, AND TESTING PROCESSES

Mustafa DEMİR
Endüstriyel Araçlar Tasarım Şefi, Tümosan Teknoloji ve Mühendislik, İstanbul, Türkiye.
ORCID ID: 0009-0001-2830-7894

Ali Can TELLİOĞLU
Araç Kalibrasyonu ve Alt Sistemler Test Şefi, Tümosan Teknoloji ve Mühendislik, İstanbul, Türkiye.
ORCID ID:0000-0003-0181-0921

Aykut DANA
Test ve Validasyon Müdürü, Tümosan Teknoloji ve Mühendislik, İstanbul, Türkiye
ORCID ID:0009-0000-9317-121X

Murat ŞEN
Dr. Öğr. Üyesi, Marmara Üniversitesi, Teknoloji Fakültesi, Makine Mühendisliği Bölümü, İstanbul, Türkiye.
ORCID ID:0000-0003-2216-245X

ÖZET
Bu çalışma, 3.5 ton taşıma kapasiteli bir forkliftin çatallarının, ISO 2328 standardına uygun olarak tasarlanması, ISO 2330 standardında belirtilen koşullar altında sonlu elemanlar yöntemi (FEM) ile analiz edilmesi ve deneysel olarak teste tabi tutulması süreçlerini bütünleşik bir şekilde ele almaktadır. Forklift çatallarının, iş güvenliği ve operasyonel verimlilik açısından taşıdığı kritik önem vurgulanarak, yapısal hasarların önlenmesinde doğru tasarım, malzeme seçimi ve periyodik kontrolün rolü detaylandırılmıştır. Çalışmanın literatürden temel farkı; sonlu elemanlar yöntemi ile yapılan statik analize ek olarak, ürünün gerçek test koşulları altında doğrulanmasıdır. Bu sayede, sayısal analiz sonuçları ile deneysel bulgular arasındaki korelasyonun incelenmesi ve sapmaların ortaya konulması amaçlanmıştır. Bu kapsamda yapılan korelasyon çalışmasında, D=500 mm yük uygulama noktasında sonlu elemanlar analizi sonucunda yaklaşık 52 mm deplasman öngörülürken, fiziksel testlerde aynı noktada 60 mm deplasman ölçülmüştür. Bu sonuçlar, analiz ve test verileri arasında yük merkezinde yaklaşık %15 oranında bir sapma bulunduğunu göstermiştir. Testlerde elde edilen daha yüksek deplasman değerleri, hem gerçek malzemenin analiz modelinde tanımlanan malzeme özelliklerine kıyasla daha yüksek elastik deformasyon kapasitesine sahip olabileceğini hem de gerçek test düzeneğindeki (test bench) fikstür esnemelerinden ve bağlantı boşluklarından kaynaklanabileceği değerlendirilmiştir. Elde edilen bu bulguların, güvenlik standartlarını karşılayacak şekilde optimize edilmiş, daha hafif ve uzun ömürlü çatal tasarımlarının geliştirilmesine katkı sunması hedeflenmiştir.

ABSTRACT
This study presents an integrated approach to the design of forklift forks with a rated load capacity of 3.5 tons in accordance with ISO 2328, their finite element method (FEM) analysis under the loading conditions specified in ISO 2330, and their experimental validation through physical testing. The critical role of forklift forks in ensuring occupational safety and operational efficiency is emphasized, while the importance of proper design, material selection, and periodic inspection in preventing structural failures is discussed in detail. The primary contribution of this study, distinguishing it from previous research, is the experimental validation of the numerical results obtained from the finite element analysis under actual test conditions. Accordingly, a correlation analysis was conducted to evaluate the agreement between the numerical predictions and the experimental measurements and to identify possible discrepancies. The correlation study revealed that, at a load application distance of D = 500 mm, the finite element analysis predicted a displacement of approximately 52 mm, whereas the physical tests measured a displacement of 60 mm at the same location. These findings indicate an approximately 15%

difference between the numerical and experimental results at the load center. The higher displacement values observed during the physical tests may be attributed to the actual material exhibiting greater elastic deformation capacity than that assumed in the numerical model, as well as to fixture compliance and connection clearances within the experimental test bench. The findings of this study are expected to contribute to the development of optimized forklift fork designs that satisfy safety standards while offering reduced weight and extended service life.

INTRODUCTION

Forklifts are industrial material handling vehicles designed to transport loads from one location to another. Depending on the physical characteristics of the load, various attachments can be integrated into the forklift, enabling the handling, loading, and stacking of different types of materials. The type of forklift used varies according to the operating environment in which it is employed (Demir, 2024).

The lifting mechanism of a forklift is a critical system that is subjected to the highest stress levels and continuous loading during operation. Therefore, periodic inspection of the lifting equipment and a thorough understanding of the functionality of its components play a vital role in preventing occupational accidents and material damage resulting from improper use. Machine components designed to withstand heavy mechanical loads are subjected to various strength tests during the manufacturing process and are typically tested under loads several times greater than their rated working load. The relationship between the maximum applied test load and the design load defines the safety factor of the component. However, due to unpredictable operating conditions and mechanical wear that develops over time, these components require regular inspection. Furthermore, certain components should be replaced as part of preventive maintenance even if no visible signs of failure are present, since damage mechanisms such as material fatigue may not always be detectable through visual inspection (MEB, 2011).

The load-carrying forks used in forklifts are the primary components that come into direct contact with the load and enable its handling and transportation. In addition to supporting the load, the forks are the principal load-bearing elements that directly influence the structural integrity of the entire mast system. At the same time, they should possess a compact cross-section and low weight while maintaining good ductility and adequate low-temperature impact resistance (Ge et al., 2019). Therefore, forklift forks are considered critical components for ensuring both operator safety and overall workplace safety.

Proper adjustment of fork spacing according to the load's center of gravity and ensuring that the load is balanced during handling and stacking are fundamental requirements for safe forklift operation (MEB, 2011). The use of appropriately sized pallets, positioning the forks as far apart as practicable under the load, and distributing the load evenly across both forks contribute to reducing structural stresses. Furthermore, avoiding the handling of loads with a single fork helps prevent excessive stresses on the forks, thereby enhancing operational safety and extending the service life of the equipment (Erel, 2015). Structural damage that may occur in forklift forks during load lifting through the mast system can pose serious safety risks to both the operator and nearby personnel. Such damage may result in sudden load loss or equipment failure, thereby increasing the likelihood of occupational accidents (Zhou, 2022). However, the design of forklift forks, which serve as the primary load-bearing components, faces several engineering challenges, including material inefficiency, structural fatigue, and performance degradation associated with long-term service (Bekele, 2025). Furthermore, the ability of these components to operate safely throughout their service life depends not only on appropriate design parameters but also on operators adhering to safe operating practices and established working procedures.

In particular, striking the fork tips against fixed surfaces during load engagement or subjecting the mast system to irregular impact loads are among the primary factors that compromise the structural integrity of the equipment and adversely affect its service life. In this context, ensuring that the design, operation, and periodic inspection of forklift forks are carried out in accordance with applicable safety regulations and international standards is of critical importance for maintaining operational safety.

Furthermore, to prevent existing or potential damage that may develop during service, these systems should undergo periodic inspection at least once a year in accordance with the applicable regulations. If cracks, permanent deformation, or other structural defects are identified during visual inspections, the necessary corrective actions should be implemented promptly to ensure occupational safety (Yazıcı, 2015).

Recent studies on the structural integrity and performance of forklift forks have primarily focused on finite element method (FEM)-based optimization and material behavior. In a study conducted for a 10-ton capacity forklift, Mahdieh, Nazari, and Ghlaim (2024) compared the performance of different steel alloys (St37 and St52) using FEM simulations and experimental testing. Their findings demonstrated that the St52 alloy exhibited superior mechanical performance; however, its strength should be further enhanced through heat treatment to ensure adequate safety. These results emphasize the importance of considering material selection and manufacturing processes in an integrated manner. Similarly, Zhang et al. (2020) combined numerical simulation with mathematical modeling to analyze the stress distribution in a forklift fork and carried out structural optimizations aimed at improving fatigue life. Their study confirmed that stress concentrations in the heel region of the fork are the primary cause of fatigue-induced failures.

In addition, recent studies have also highlighted significant advances in design optimization. Kumaran, Muthuram, and Chealvan (2025) performed topology optimization of a forklift fork using the ANSYS Direct Optimization module and achieved up to a 48% reduction in the maximum equivalent stress, thereby significantly extending the service life of the component. Similarly, Jiang, Lian, and Wu (2025) analyzed the fork carriage structure of an automated guided vehicle (AGV) used in intelligent warehousing systems through finite element analysis and proposed a structural optimization that reduced the overall weight by 11.5% while satisfying the required performance criteria. These findings demonstrate that FEM-based optimization not only enhances structural safety but also contributes to sustainability objectives by reducing material consumption and improving energy efficiency.

This study covers the design of a forklift fork with a rated load capacity of 3.5 tons according to ISO 2328, the finite element method performed using the Hyperworks software under the conditions specified in ISO 2330, and the experimental validation carried out on a test platform. The distinguishing aspect of this study compared with previous research is the validation of the product under actual test conditions in addition to the static analysis performed using the finite element method. As a future extension of this work, fatigue analysis will be conducted to determine the long-term behavior of the fork under repeated loading and unloading cycles. Furthermore, by considering the deviations between the finite element method results and actual experimental conditions, subsequent studies may enable reliable model validation based solely on numerical analyses.

METHODOLOGY

The lifting operation of the load in forklifts is performed by the mast system. The mast system is illustrated in Figure 1.

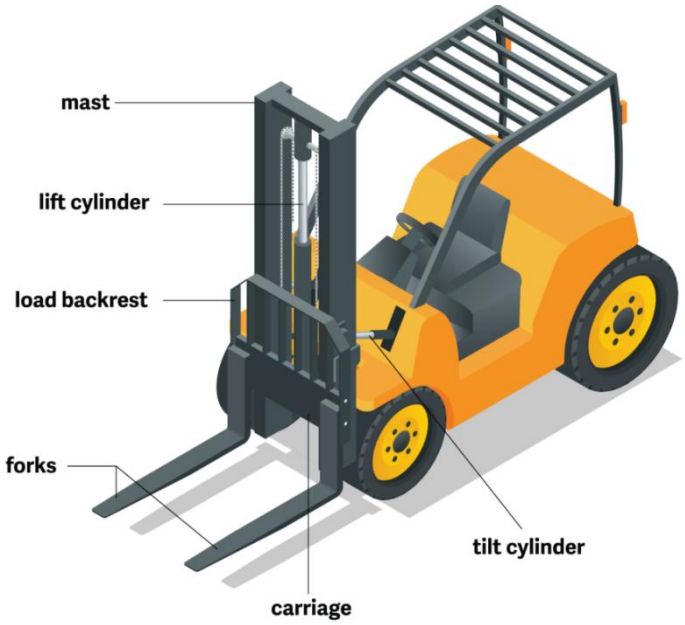

Figure 1. Mast Detail Part Display (Kadison, 2024)

The load handling system of a forklift consists of an integrated structure in which all components support and interact with each other. The forks, which directly carry the load, transfer the applied weight to the fork carriage, the platform to which they are attached. A support structure known as the load backrest is positioned behind the forks to prevent the load from falling backward toward the operator. The primary movements of the system are provided by hydraulic cylinders; while the lift cylinders enable the vertical lifting and lowering of the load, the tilt cylinders control the forward and backward inclination of the forks and carriage. The main structural framework supporting all these components is the mast assembly. These guided rail structures form the backbone of the forklift and provide essential support to ensure that the elevated load remains stable and safely positioned during operation (Erel, 2015).

In this study, the fork design of a forklift with a rated lifting capacity of 3.5 tons was developed. The structural behavior of the designed fork was analyzed using the finite element method (FEM) through the Hyperworks software. During the analysis process, the loading conditions and design criteria specified in the relevant standards were taken into consideration. The findings obtained from the numerical analyses were compared with the results of experimental tests conducted using the developed test setup, and the performance and reliability of the design were evaluated.

Fork Design According to ISO 2328 Standard

This international standard defines the dimensional requirements and additional specifications necessary to ensure the interchangeability of forklift carriages and hook-type forklift forks for forklifts with lifting capacities up to 10,999 kg. The standard also specifies the compatibility requirements of carriage attachments to be used according to the fork type. Forks are classified into two different types, Type A and Type B, and are further categorized into five classes based on their load capacities (International Organization for Standardization, 2007). For the 3.5-ton capacity forklift, Class 3 is used (Table 1).

The required design parameters were created in the CATIA V5R21 three-dimensional CAD software (Figure 2). These parameters were applied and constrained on a two-dimensional sketch, and the three-dimensional model was subsequently generated (Figure 3).

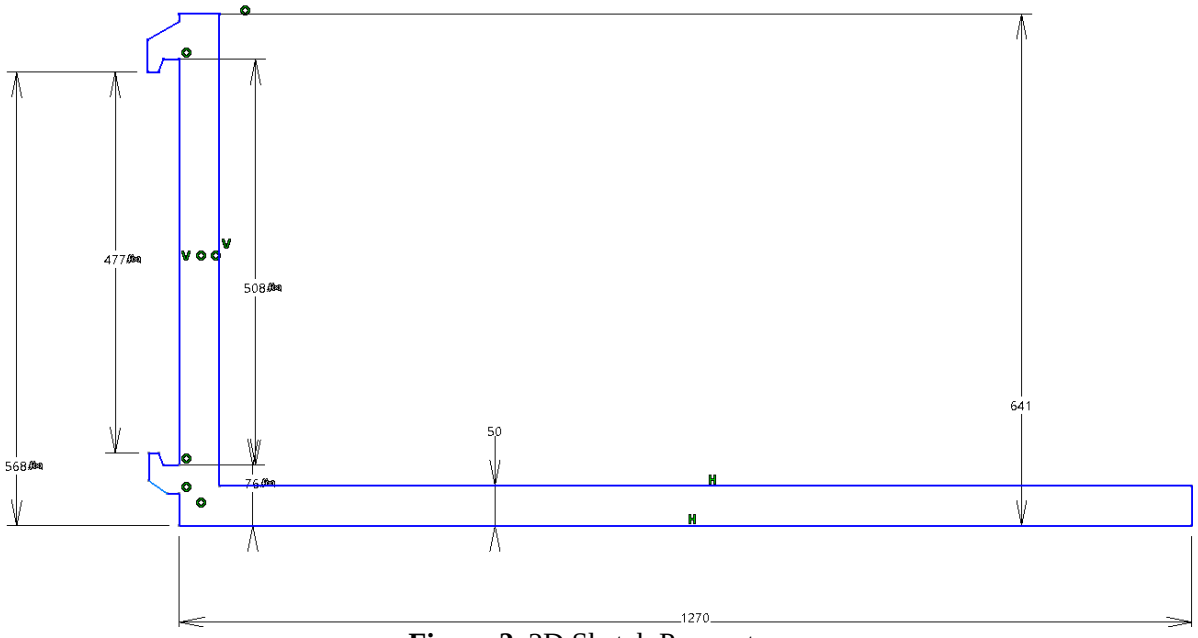

Figure 2. 2D Sketch Parameters

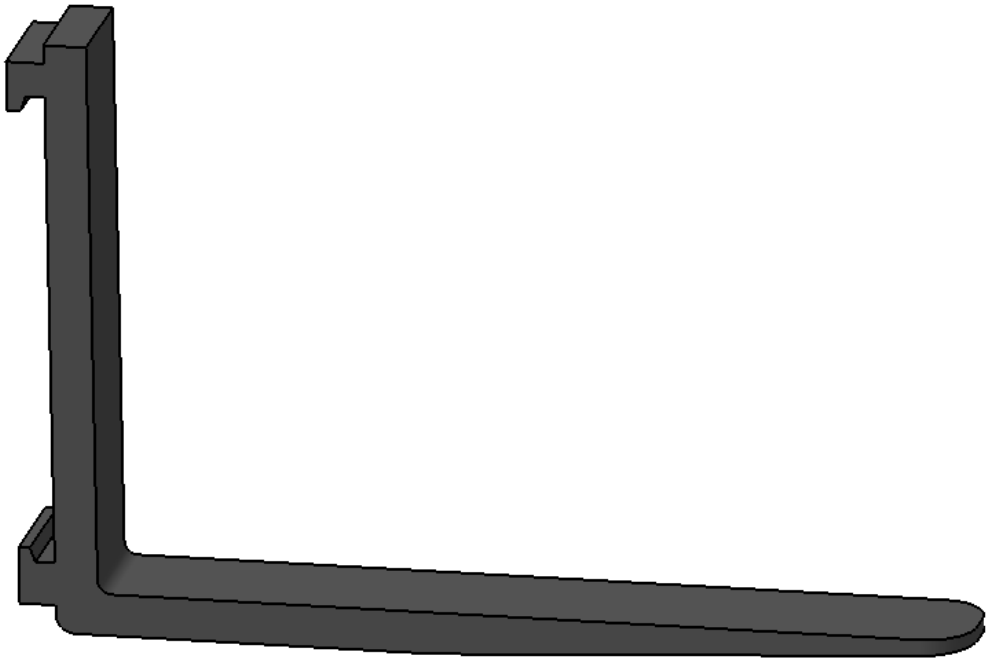

Figure 3. 3D Computer-Aided Design Model

Table 1. ISO 2328 Class 3 fork detail dimensions.

Class	Truck rated capacity (kg/mm)	Fork arm type	a	c1	h1	h2	m1	m2	k1	Lower hook v
3	2 501 to 4 999 / 500 and 600	A	76	22	568	477	40	38	17	115
3	2 501 to 4 999 / 500 and 600	B	203		695					

Test Condition According to ISO 2330 Standard

This International Standard specifies the manufacturing, testing, and marking requirements for solid-section fork arms intended for mass production and various assembly applications. The fundamental testing philosophy of this standard is based on the verification of each fork arm produced in series by subjecting it to a static load representing the worst-case conditions that may be encountered during field operation. During the test procedure, the absence of permanent deformation is considered an indication that the yield strength of the fork arm has not been exceeded.

- The fork arms should be made of solid material.
- The end section is made thin so that it can easily grip and stack the load.

In this context, the test procedure according to ISO 2330 is shown in Table 2.

Table 2. Yield Test Procedure Under ISO 2330

	Yield Test
Procedure	Apply the appropriate proof load gradually and without impact at a distance D. The load shall be applied twice and maintained for 30 seconds.
Requirement	Measurements shall be taken from the upper surface of the fork blade tip after the first test and after the second test. The comparison between these two measurements shall demonstrate that no permanent deformation has occurred.

The test load shall correspond to three times the specified capacity C of the fork arm (Table 3). Considering the gravitational acceleration (9.81 m/s²), the static load was calculated as 103005 N. The fork was tested under a force of 106450 N, which was obtained by applying an additional safety margin of approximately 3.3% to account for test equipment tolerances, sensor accuracy, and the self-weight of the loading fixture.

Table 3. Test Load Calculation

C	3500	kg
Ft	3500X3X9.81	N
Test Load	FtX1.033	N
Test Load	106450	N

Execution of the Test

For the execution of this test, loading was performed using a vertical actuator. An experimental setup was developed to accurately simulate the static loading conditions specified in ISO 2330. The test setup is based on the principle of applying a gradually increasing and controlled force through a load cell integrated into a vertical actuator positioned perpendicular to the load-bearing surface of the fork. Using this approach, the fork was subjected to a test load exceeding its nominal load capacity at a specified load center distance.

The test procedure was designed in two stages. During the first stage, referred to as the preloading phase, the fork was loaded up to a certain percentage of the test load specified by the standard to verify whether any possible seating effects or clearances existed within the test setup. Subsequently, the main test phase was initiated, during which the load was increased at a constant rate until reaching the predetermined maximum test value and maintained at this level for 30 s, as specified by the standard. Throughout the loading and subsequent unloading processes, real-time deformation and displacement data were recorded.

The acceptance criterion of the test, as explicitly defined in ISO 2330, is the absence of any permanent deformation in the fork after the removal of the test load. This criterion is considered the primary evidence that the yield strength of the fork has not been exceeded and that the material remains within the elastic region. The experimental data obtained were directly compared with the results of the finite element method performed under the same boundary conditions in the subsequent stage, with the aim of validating the numerical model.

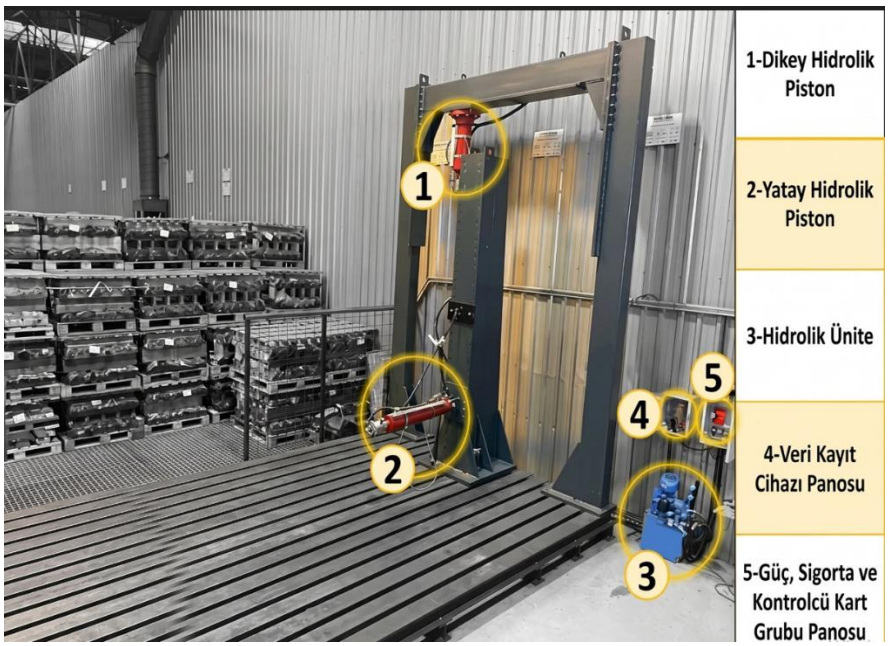

Figure 4. General View of The Test Unit.

The test unit shown in Figure 4 is used to perform controlled static loading tests on specific components. The test specimen is rigidly fixed to the ground through the channels located on the base structure. Horizontal and vertical loading conditions are generated by a hydraulic power unit and applied to the specimen in a controlled manner. During the test, displacement, applied load, and energy variations of the specimen are monitored through the control system, while the acquired data are simultaneously recorded using a data acquisition and recording system. In addition, emergency stop and circuit breaker mechanisms are integrated into the system to ensure operational safety against unexpected conditions that may occur during testing.

As shown in Figure 5, a loading fixture with dimensions of 250 × 250 × 20 mm was mounted at the load center distance of the fork, D = 500 mm. The target load was applied using a hydraulic actuator with a capacity of 30 tons. The cylindrical component welded to the loading fixture ensured the alignment of the axial force generated by the actuator and contributed to the uniform transfer of the applied load to the test specimen. During the experiment, the displacement of the actuator was continuously monitored and controlled using a linear scale integrated into the hydraulic piston.


Figure 5. Mounting of the Forklift Fork on the Test Bench Unit

FEM Analysis

The finite element method (FEM) is one of the most widely used numerical analysis techniques in computer-aided simulations. FEM eliminates the need for producing physical prototypes and enables the analysis of any part or component of a system under specified operating conditions. Furthermore, it allows design modifications to be implemented based on the analysis results, thereby improving product reliability and performance.

Hyperworks 2017.2 software was used for the static analysis. Within the software environment, a fine mesh structure was generated, the applied load was defined, and the component was constrained according to its operating position. The analysis input parameters are presented in Table 4.

The software interface is presented in Figure 6, while the constraint locations and load application points of the component are shown in Figure 7.

Table 4. Hyperworks Analysis Inputs

Element	466403 nodes
Elements Size (Avg)	2 mm
Element Type	Hexa Solid
Analysis Type	Nonlinear Quasi-Static
Applied Force	106450 N

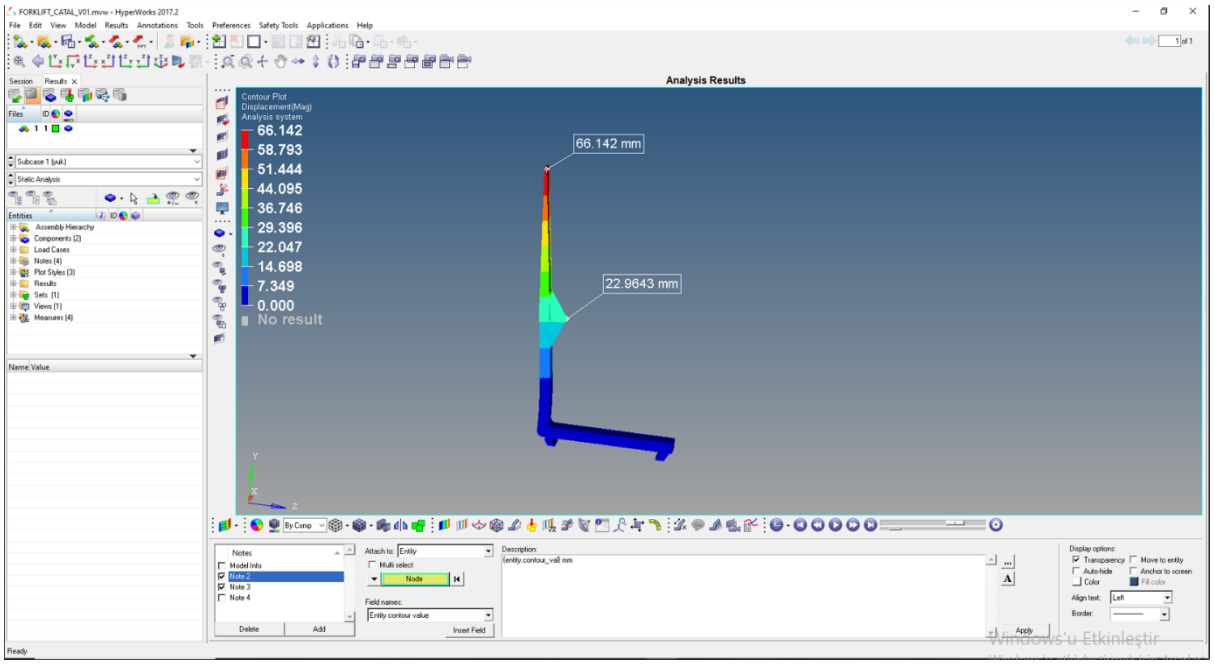

Figure 6. Hyperworks Analytics Interface

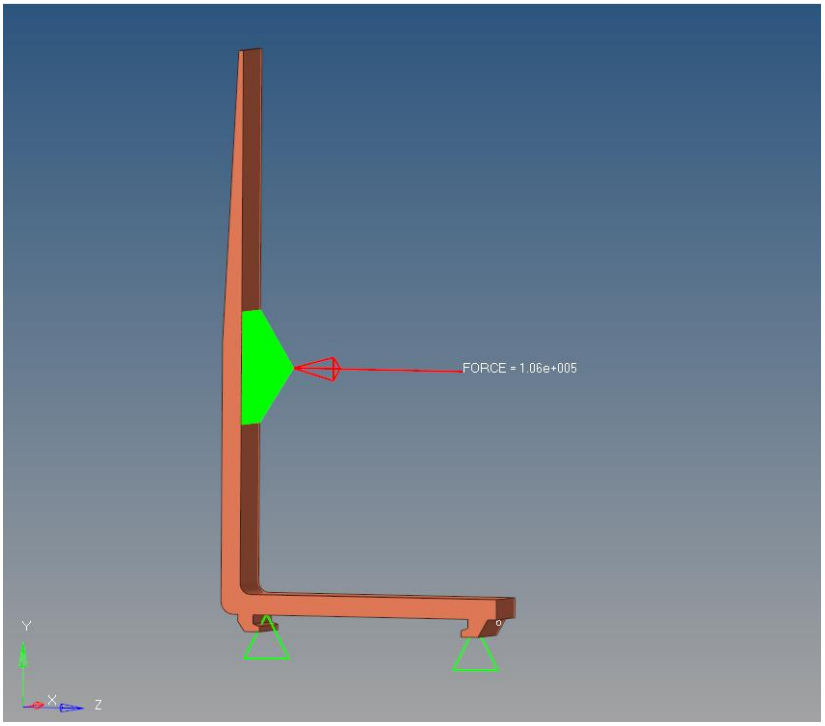

Figure 7. Fixing Point and Force Application Area

The analysis configuration of the component was maintained in accordance with its operating principle under field conditions. The applied load was transferred through the same region as the 25 cm loading plate used in the test bench setup. The component was constrained at the guide points.

RESULTS

In this section, the findings obtained from the experimental tests of the 3.5-ton capacity forklift fork conducted according to ISO 2330 and the finite element analyses performed in the Hyperworks environment are presented comparatively. The results are evaluated in two main categories: static structural analysis and experimental validation.

Finite Element Method Results

The developed three-dimensional solid model was constrained and loaded to represent the test conditions specified in ISO 2330. The static structural analysis results demonstrated that the maximum equivalent stress was concentrated, as expected, in the critical region known as the fork heel, where a significant cross-sectional transition occurs. The maximum stress value observed throughout the component remained below the yield strength of the selected material, indicating that the design satisfies the criterion of being subjected to a test load equivalent to three times the rated lifting capacity, as specified by the standard.

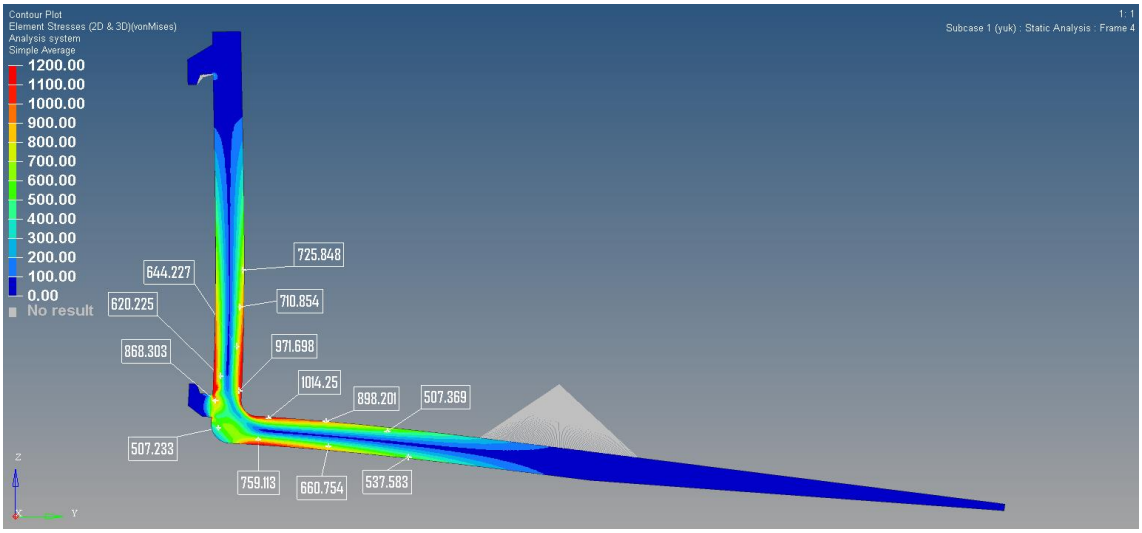

Figure 8. Stress Distributions

In the finite element analysis, it was observed that the equivalent stress values calculated in some localized regions slightly exceeded the yield strength of the material. However, this condition was not interpreted as an indication that the component underwent overall plastic deformation or lost its structural integrity. The exceedance of the yield strength only suggests that plastic deformation may initiate locally within these specific regions. The occurrence of localized peak stresses at sharp geometric transitions, small radii, contact areas, or load application points is a commonly encountered phenomenon in finite element analyses. Such local stress concentrations generally occur within very small volumes and do not directly affect the overall load-carrying capacity or functional performance of the component. In the investigated model, the regions exceeding the yield strength exhibited a highly localized characteristic, and no widespread plastic deformation behavior was observed (Figure 8).
Furthermore, it is considered that the stress concentrations occurring in these regions can be reduced through design optimization studies. In particular, increasing the transition radii, revising the cross-sectional reduction geometry in the fork approach region, and implementing geometric improvements to achieve a more uniform load distribution are expected to reduce the peak stress values. The maximum deformation was observed at the tip region of the fork, and this deformation level was determined to be within an acceptable range that does not hinder the functional operation of the component. According to the analysis results, a displacement of 52 mm was obtained at the load center distance of D = 500 mm, where the load was applied, while a displacement of 141 mm was observed at the fork tip (Figure 9).

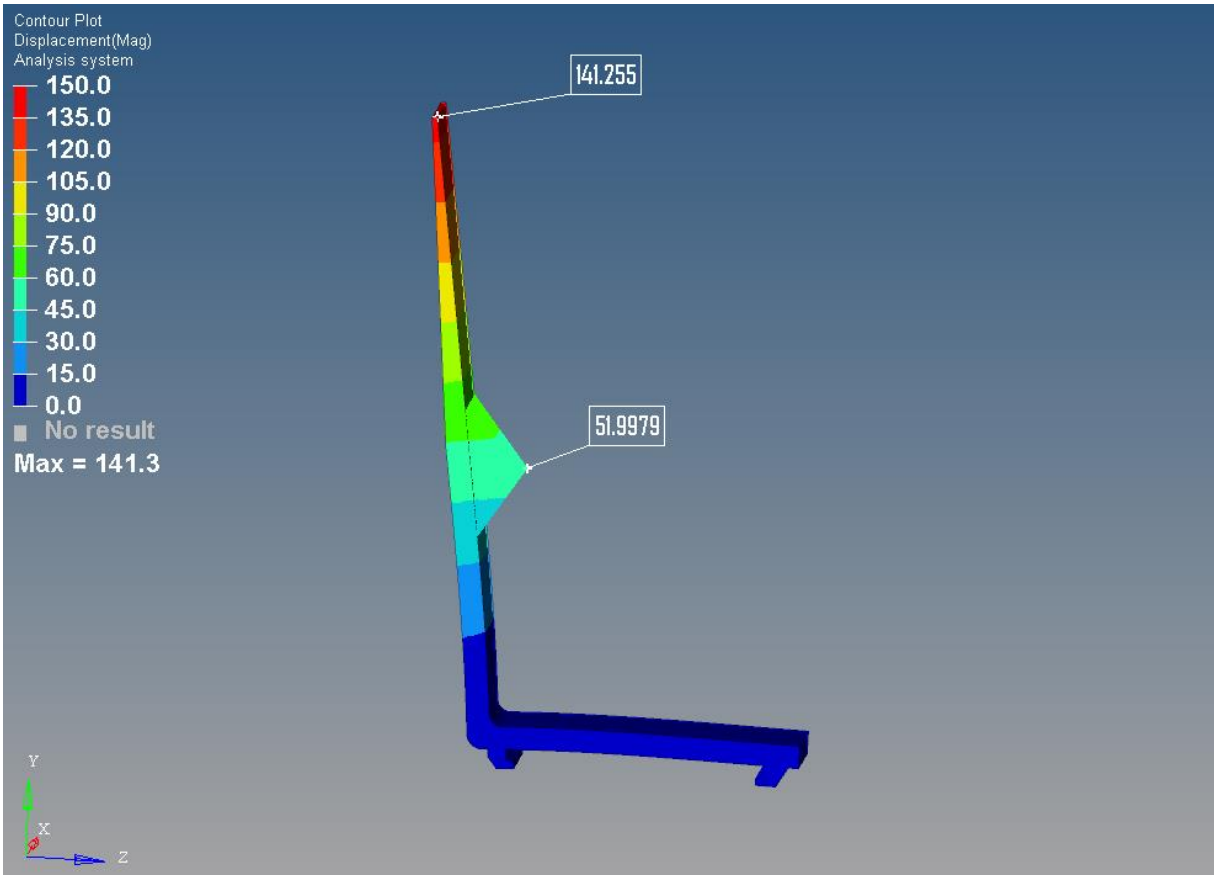

Figure 9. Fork Displacement Value

Experimental Test Results

The DEWE-43A is a high-precision data acquisition (DAQ) system widely used in engineering applications, automotive testing, and research and development activities. The system converts analog signals obtained from various sensors, such as voltage, force, temperature, pressure, vibration, and displacement, into digital data with high sampling accuracy and transfers them to a computer environment. The monitoring, processing, and recording of the acquired data are performed using Dewesoft software. The data monitoring and control interface of the software is presented in Figure 10. Through the Dewesoft interface, the data obtained from the measurement equipment integrated into the system can be visualized, analyzed, and recorded in real time. Within the scope of this study, displacement measurements were performed using a linear scale to investigate the structural behavior of forklift forks under static loading conditions. Simultaneously, the applied force values and the amount of energy dissipated by the system were monitored. In addition, the operating pressure of the hydraulic actuator used for the loading process was continuously monitored to ensure that the test procedure was maintained under controlled conditions.

By this means, the force, displacement, energy, and hydraulic pressure parameters were recorded synchronously throughout the loading process. The obtained data were used to evaluate the mechanical performance of the fork and to validate the experimental results.

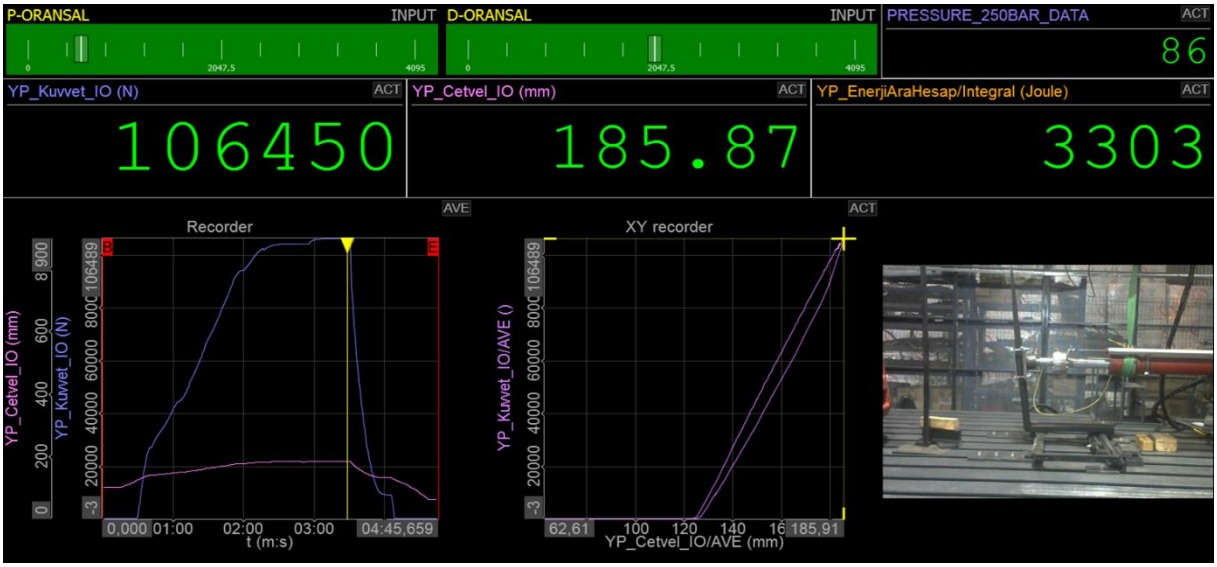

Figure 10. Dewesoft Program Control Interface

Since the test specimen is a fork used in forklifts with a nominal load capacity of 3500 kg, the relevant standard requirements specify that the static load test shall be performed under a load equivalent to three times the rated capacity. Accordingly, an equivalent load of 10,500 kg was applied to the fork during the test. The corresponding force value was determined as 106,450 N by considering the measurement accuracy of the load cell, sensor tolerances, and an additional safety margin of approximately 3.3%.
The force applied by the hydraulic actuator did not reach the target value instantaneously due to the operating characteristics of the system; instead, it increased linearly throughout the loading process until reaching the maximum force level. The time required to reach the maximum force value and the duration of maintaining this load level were evaluated using the force–time curve. This loading procedure was repeated twice. The obtained force–time graph is presented in Figure 11.

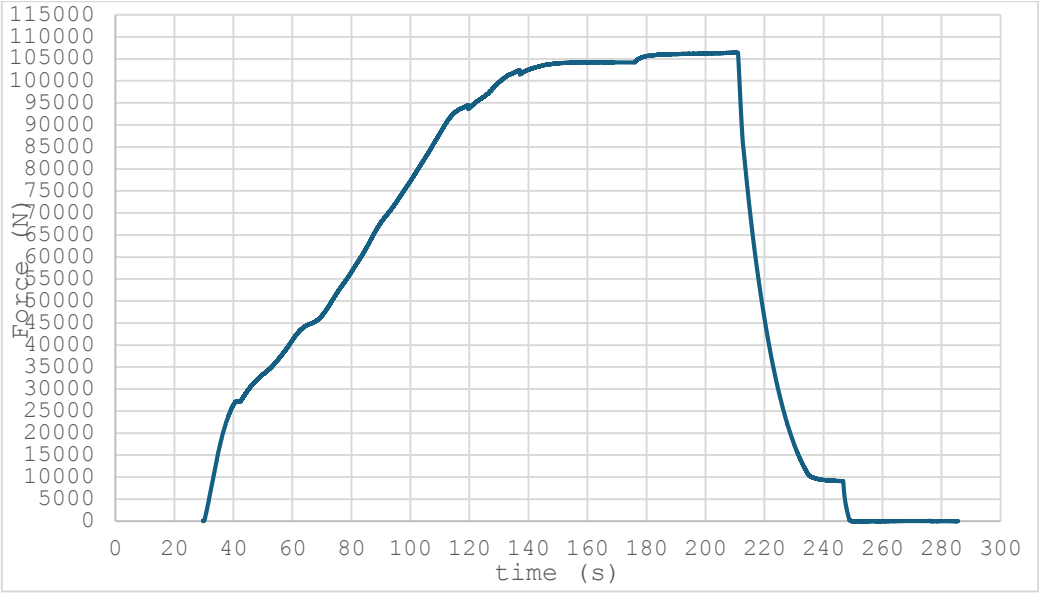

Figure 11. Force-Time Graph

As a result of the linear increase in the applied force, the deformation and displacement behavior of the fork also exhibited a linear trend. When the maximum load level was reached, a displacement of 60 mm occurred between the initial position and the maximum load condition at the load center point of D = 500 mm, according to the measurements obtained from the linear scale under the applied force. At this

location, displacement measurements were taken only at the load application point using a precision linear scale in order to maintain measurement accuracy.

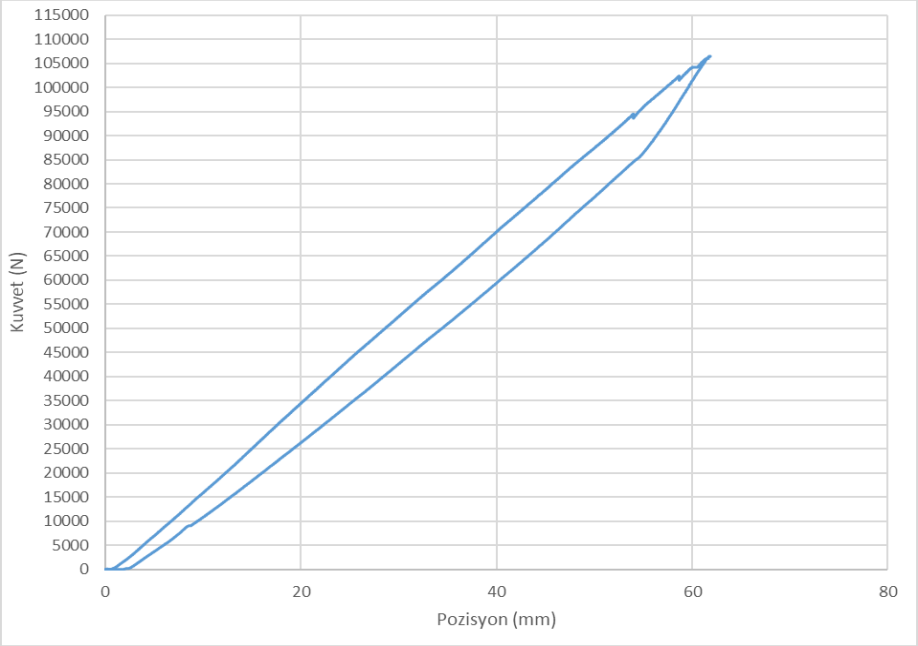

Figure 12. Force-Displacement Graph

When the maximum load level was reached, a displacement of 60 mm was measured between the initial position and the maximum load condition at the load center point of D = 500 mm under the applied force, based on the linear scale measurements (Figure 12). Within the scope of the numerical analysis, the displacement value obtained at the same loading point (D = 500 mm) was calculated as 51.99 mm (approximately 52 mm) (Figure 9). At this point, in order to maintain data reliability and measurement accuracy, the theoretical displacement at the fork tip was not estimated through extrapolation; instead, the experimental and numerical validation was directly performed based on the D = 500 mm measurement point where the displacement was obtained.



Figure 13. Fork Displacement on the Test Bench.

As a result of the evaluation of the force–displacement data, it was determined that the position value measured by the linear scale, after the applied load was completely removed and the force level returned to zero, was identical to the initial reference position. The observed 1 mm difference was considered to be within the sensor tolerance range. In other words, no permanent difference was observed between the displacement values measured before and after loading. This result indicates that the deformations occurring during the test were entirely elastic in nature and that the material returned to its original geometry after the removal of the load.

The experimental findings demonstrate that no permanent deformation, bending, or dimensional change occurred in the fork structure despite the application of the maximum test load. The displacements observed during loading remained within the elastic behavior limits of the material; upon removal of the load, the stored elastic strain energy was released, allowing the structure to return to its original position. Therefore, no residual displacement or plastic deformation was detected as a result of the test (Figure 14).

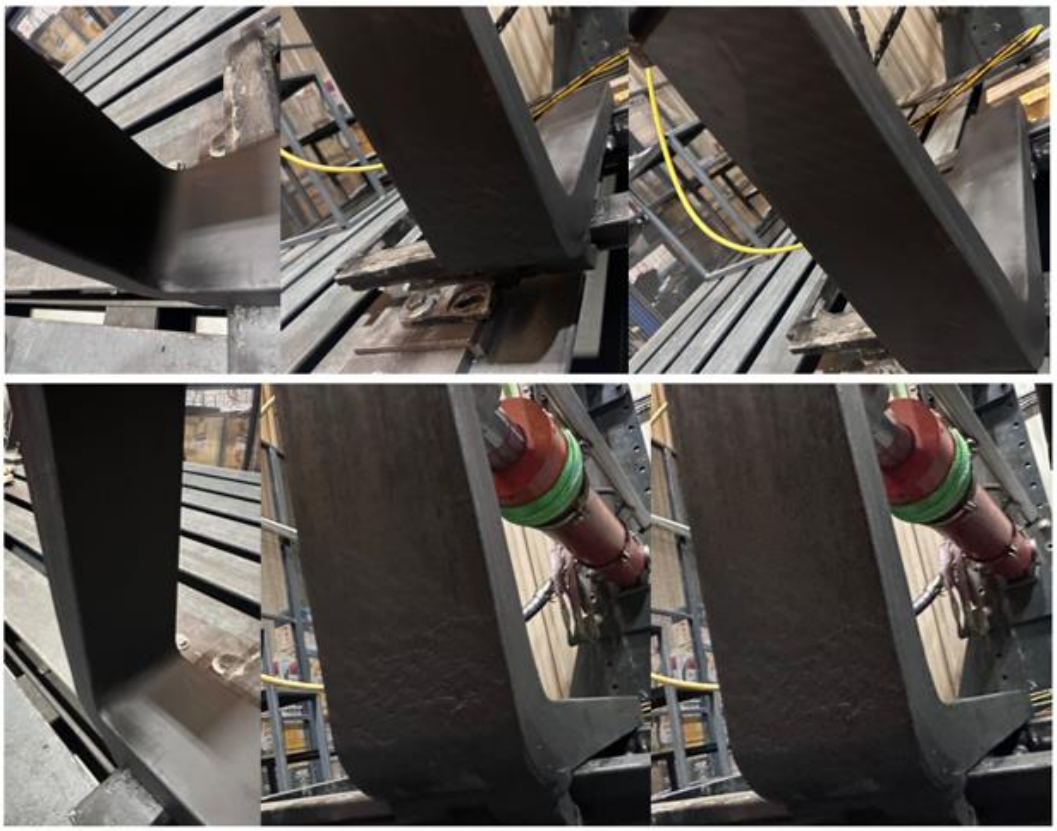

Figure 14. Post-Test Visual Inspection Procedure

The obtained results indicate that the applied load level did not exceed the yield strength of the fork and that the structural integrity was maintained. Therefore, it was concluded that the test specimen exhibited sufficient stiffness and strength under the applied static loading conditions and preserved its functional and geometrical characteristics after the removal of the load.

CONCLUSION

The evaluation of the proportional deviations between the analysis and test results not only confirmed the accuracy of the numerical model but also revealed the extent to which the material model represents actual operating conditions. The selection of an appropriate material supported by proper heat treatment processes significantly enhances the durability and impact resistance of the fork, thereby directly contributing to operational safety.

In the correlation study, the finite element analysis predicted a displacement of approximately 52 mm at the load application point of D = 500 mm, whereas a displacement of 60 mm was measured at the

same location during the physical tests. These results indicate an approximately 15% deviation between the numerical and experimental data at the load center.

The higher displacement values obtained from the experimental tests suggest that the actual material may possess a higher elastic deformation capability compared with the linear (idealized) material properties defined in the numerical model. In addition, it is considered that structural clearances and compliance within the test bench setup contributed to the measured displacement values. This additional deformation capability of the material contributes to the redistribution of stress under loading conditions and the attenuation of localized stress concentrations.

Therefore, the regions identified in the numerical analyses as areas exhibiting local yielding or the onset of deformation were observed not to produce permanent deformation at the same level during the physical tests. The experimental results demonstrate that the localized stress concentrations identified in the analyses did not reach a level that adversely affected the structural integrity, and that the actual material behavior provided additional deformation capacity in these regions, enabling a more effective redistribution of the applied loads.

ACKNOWLEDGMENT

First of all, we would like to thank the senior management of Tümosan Motor and Tractor Company, Mr. Volkan Gün, Director of Technology and Engineering at Tümosan, Mr. Orkan Buran, Deputy Director of Defense and Industrial Vehicles, and Mr. Furkan Pektaş, Vehicle Test Engineer, for their support in conducting this test.

REFERENCES

Bekele, R. N. (2025). Optimization of forklift fork design for enhanced performance and safety in material handling operations using finite element analysis [Master's thesis, Adama Science and Technology University].

Demir, M. (2024). Dizel motorlu ve tam elektrikli forkliftlerin çalışma parametreleri açısından kıyaslanması [Yüksek lisans tezi, Marmara Üniversitesi].

Erel, F. (2015). Forkliftlerle güvenli çalışma [Uzmanlık tezi, T.C. Çalışma ve Sosyal Güvenlik Bakanlığı İş Sağlığı ve Güvenliği Genel Müdürlüğü].

Ge, Y., Zhao, S., Ma, L., Yan, T., Li, Z., & Yang, B. (2019). Inclusions control and refining slag optimization for fork flat steel. Metals, 9(2), Article 253. https://doi.org/10.3390/met9020253

International Organization for Standardization. (2007). Fork-lift trucks — Hook-on type fork arms and fork arm carriages — Mounting dimensions (ISO Standard No. 2328:2007).

Jiang, Y., Lian, S., & Wu, S. (2025). Simulation analysis and optimization design of forklift AGV fork rack. Journal of Physics: Conference Series, 2992(1), Article 012006. https://doi.org/10.1088/1742-6596/2992/1/012006

Kadison, A. (2024, November 25). Forklift masts: Everything you need to know. Rentmas. https://blog.rentmas.com/en/forklift-masts-everything-you-need-to-know

Kumaran, M., Muthuram, N., & Hari Chealvan, S. (2025). Redefining forklift longevity: A study on fork design optimization and lifecycle enhancement. International Journal on Interactive Design and Manufacturing (IJIDeM), 19, 6171–6187. https://doi.org/10.1007/s12008-024-02195-1

Mahdieh, M. S., Nazari, F., & Ghlaim, F. A. (2024). Design of forks and lifting system of a 10-ton forklift truck by FEM simulation. Journal of Simulation and Analysis of Novel Technologies in Mechanical Engineering, 16(3), 5–16.

Millî Eğitim Bakanlığı [MEB]. (2011). Motorlu araçlar teknoloji: Forkliftler (Modül No. 525MT0175).

Yazıcı, M. (2015). İş ekipmanları yönetmeliği: İstif makinaları (forklift, transpalet, lift). Mühendislik ve Makina Dergisi, (663).

Zhang, E., Zhuo, J., Liu, Z., & Guo, T. (2020). Structural optimization of forklift fork based on numerical simulation and mathematical modeling of stress and fatigue. Revista Internacional de Métodos Numéricos para Cálculo y Diseño en Ingeniería, 36(1), 1–12. https://doi.org/10.23967/j.rimni.2020.03.002

Zhou, W. (2022). Finite element simulation research on structural improvement of forklift fork frame. 2022 IEEE International Conference on Computation, Big-Data and Engineering (ICCBE). https://doi.org/10.1109/ICCBE56101.2022.9888227