INVESTIGATION OF THE EFFECTS OF INTELLIGENT MACHINE FEATURES IN CNC MACHINES USED IN HIGH PRECISION MACHINING ON FORM ERRORS IN THE MACHINING OF FREEFORM SURFACES

Barkın BAKIR[1],
Murat SEN[2],
Oguzhan AYDIN[3]
[1-2] Marmara University, Technology Faculty, Department of Mechanical Engineering, Istanbul, Turkey
[3] Marmara University, Institute of Pure and Applied Sciences, Department of Mechanical Engineering, Istanbul, Turkey
ORCID: [1] 0000-0002-3031-1649, [2] 0000-0003-2216-245X
E-Posta: murat.sen@marmara.edu.tr

Abstract

Freeform surfaces are used extensively in today's aerospace, automotive, energy and transportation industries due to their superior aerodynamic properties. High aerodynamic properties lead to the need for parts with complex geometries. For this reason, freeform surfaces consist of a complex geometry formed by parametric curves. Depending on the design of freeform surfaces, production precision increases and the selection of optimum production parameters becomes important. In the production process of freeform surfaces, general process parameters such as cutting speed, feed rate, depth of cut, as well as precision machining codes on CNC machines, also affect the final part quality. In the literature, there are many studies on the surface quality of machined parts using general process parameters. However, there is no study on the use of precision machining codes and methods. For this reason, a study was conducted on the effect of the use of intelligent machine features on the surface quality of parts in the machining of freeform surfaces. In the study, airfoils, which are called 2D cross-sections of parts frequently used in transportation and energy fields such as propellers, rudders and sails, were taken into consideration. The experiments were carried out by Taguchi experimental design method based on L9 orthogonal matrix. Depth of cut (0.01-0.05-0.1 mm), feed rate (100-120-150 mm/min) and cutting speed (100-120-150 m/min) were selected as control factors and levels. As a result of the experiments, the three parts with the most form errors were identified and these parts were remachined using precision machining codes. Then, the improvements in the form defects of the parts were checked. As a result of the study, it was seen that the use of precision machining codes and methods in the machining of freeform surfaces has a positive effect on form defects and increases the surface quality of the part.

Keywords: freeform surfaces; form errors; intelligent machine features; high precision machining

1. Introduction

Freeform surfaces are frequently used in the production of parts with high aerodynamic properties. For this reason, the use of freeform surfaces is increasing in today's aerospace, automotive, energy and transportation industries. However, the geometries of freeform surfaces designed using parametric curves and three-dimensional surfaces can be quite complex. The complex geometry of freeform surfaces depending on the design increases the manufacturing precision. In order to increase the manufacturing accuracy, various algorithms have been developed for the machining of freeform surfaces. Choi and Banerjee developed a product accuracy based tool path generation algorithm for freeform surfaces. The algorithm consists of two parts: feed step function and roughness height value [1]. Erdim et al., developed a mathematical model of form error and cutting force in the machining of freeform surfaces. In addition to this prediction model, a new cutting force model based on the feed rate planning technique was developed, which is compared with the metal removal rate used in feed optimization [2]. Abbas developed an NC tool path algorithm for machining freeform surfaces. For this purpose, he created a Bezier surface according to the control points he determined. Bezier curves were utilized in the manufacturing of this surface [3]. Can and Ünüvar developed a new toolpath method for manufacturing three-dimensional (3D) curves created from a two-dimensional (2D) image traced on a freeform surface on a five-axis CNC machine. They found that deviations of less than 0.00025 between the calculated surface and the normal of the physical surface [4]. Agrawal et al. implemented a master toolpath algorithm and a common roughing strategy for machining freeform surfaces with a ball nose end mill [5]. In addition to these studies, Farouki et al. investigated the machining of freeform surfaces on five- axis CNC milling machines. They focused on tool path generation, tool orientation and tool geometry selection for machining surfaces [6].

General process parameters such as cutting speed, feed rate, tool path, chip depth are very important in the production of freeform surfaces. These parameters ensure part quality up to a point after production. In addition to general process parameters, the use of precision machining codes and methods will be effective in producing parts with higher surface quality. There are many studies in the literature on the surface quality of parts machined using general process parameters. However, there is no study on the use of precision machining codes and methods in part production. For this reason, a study was conducted on the effect of the use of smart machine features on the surface quality of parts in the machining of freeform surfaces. In the study, airfoils, which are called 2D cross-sections of parts frequently used in transportation and energy fields such as propellers, rudders and sails, were taken into consideration. The surface quality of the parts produced as a result of experimental studies using precision machining codes and methods were analyzed.

2. Materials and Methods

2.1.Material

Al 7075 alloy, which is widely used in many industrial areas such as transportation, medical and electronics industries, was used as the material in the experimental studies. The chemical composition values of Al 7075 are shown in Table 1.

Table 1. [%] chemical composition values of Al 7075 material.

Si	**Fe**	**Cu**	**Mn**	**Mg**	**Cr**	**Zn**	**Ti**
0,0567	0,2763	1,4024	0,0108	Şub.38	0,2009	6,0294	0,0778
B	**Na**	**Ca**	**Ni**	**Pb**	**I**	**Sn**	**Co**
0,0007	0.0018	0,0052	0,0027	0,0015	0,0002	0,00023	0,00035
V	**Sb**	**Sr**	**Be**	**Hg**	**Zr**	**Bi**	**Al**
0,0013	0,0007	0,00001	0,00072	0,00056	0.00078	0,0002	89,5

2.2. Method

Airfoil (Aircraft Wing Profile), which is frequently used in the aviation industry and is very sensitive to be machined, was used as the test piece in the studies. The specified NACA2412 airfoil information was obtained from the Airfoil database search site. Rough, semi- finishing and finishing processes were carried out using computer aided manufacturing (CAM) program. The same tools were used for roughing and semi-finishing of nine parts. However, in the finishing processes, the tool was changed every three parts. The reason for this is to minimize the form errors caused by the tool. The results obtained were evaluated using Taguchi experimental design. The form defects occurring in the parts after production were analyzed using Coordinate Measuring Machine (CMM). As a result of the analysis, the parts with the highest form defects were identified. These parts were re-machined using advanced machining technologies. From the results obtained, the effects of advanced machining technologies on form defects were analyzed. Figure 1 shows the experimental flow chart used in the study.

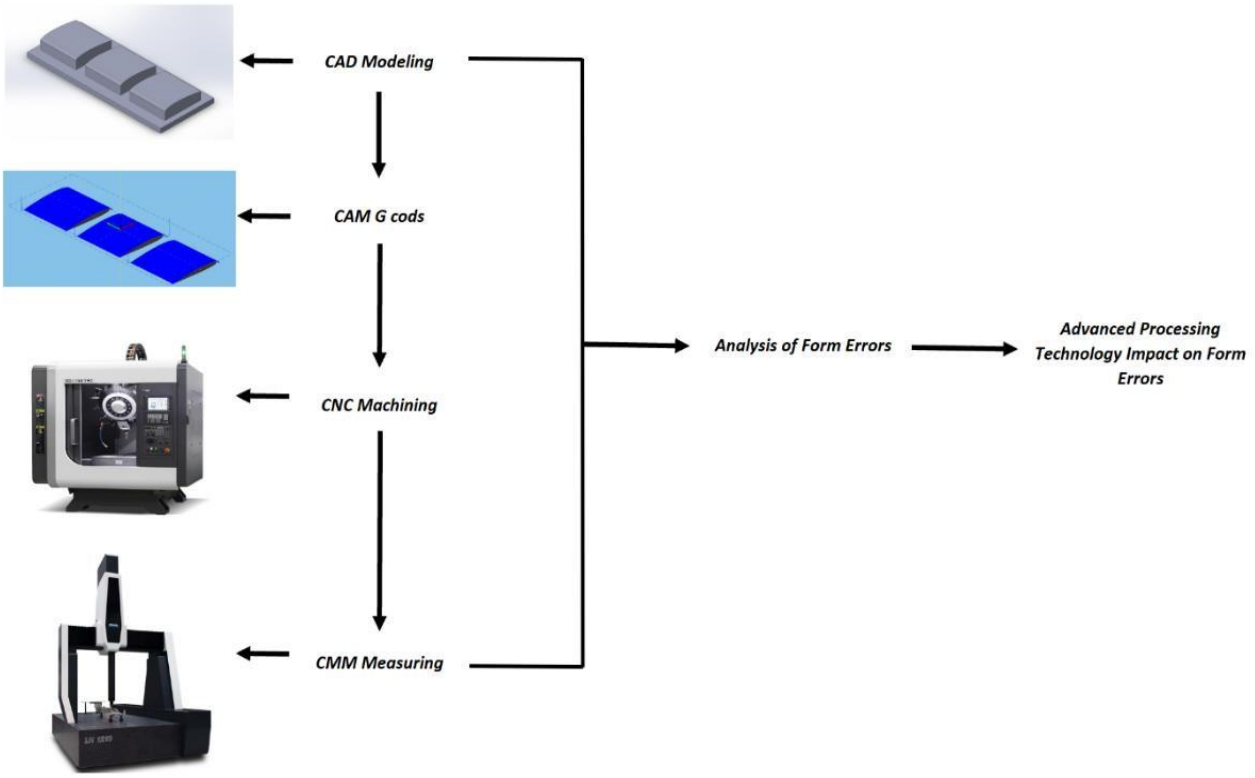

Figure1. Experiment Flowchart

2.2.1. CNC Machine

The Komatech KT420 machine used in the experimental studies is capable of three axis linear and circular interpolation with ISO format programming in metric and inch units (Figure 2). The control unit is Mitsubishi M80.



Figure 2.CNC Machine Used in the Experiments

2.2.2Cutting Tools

Flat and spherical end mills were used for machining the surfaces. In the literature study on the machining of freeform surfaces, it was understood that roughing, intermediate roughing and finishing were used. The cutting tools used were Ø 10 end mills, Ø 10 and Ø 6 spherical end mills (Figure 3).



(a) ø10 endmill (b) ø8 ball endmill (c) ø6 ball endmill

Figure 3. Cutting Tools Used; (a) ø10 endmill (b) ø8 ball endmill (c) ø6 ball endmill

2.2.3. Advanced Processing Technologies

The precision processing codes and methods used in the experimental studies are as follows.

GEOMETRY COMPENSATION FUNCTION: G61.1

The geometry compensation function (G61.1) is used to reduce classical geometry errors caused by the delay of compensation circuits and servo systems (Figure 4).

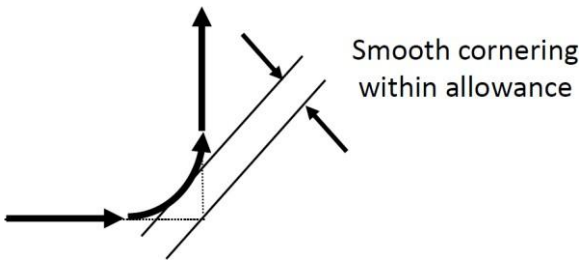

Figure 4. Smooth Corner Control

HIGH SPEED - HIGH SENSITIVITY CONTROL MODE I , II , III

This function runs a machining program that approaches a freeform surface with micro-segments at high speed

and high accuracy. This is effective in increasing the speed of machining patterns of a freeform surface (Figure 5).

- G05 P1000→ High Speed - High Precision Control Mode 2 Active
- G05 P0→ High Speed - High Precision Control Mode 2 Off

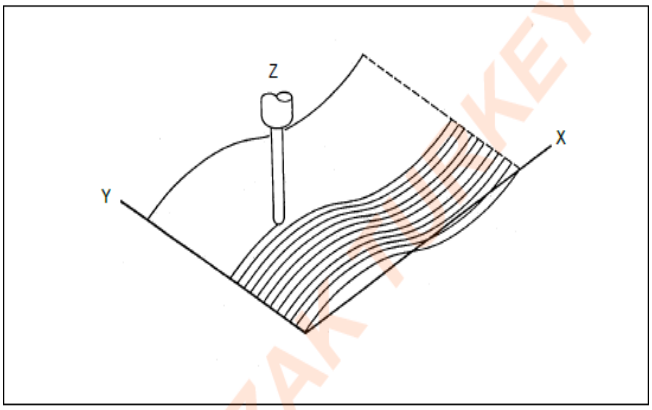

Figure 5. High Speed Machining Mode

Spline Interpolation; G05.1 Q2/Q0

This function automatically generates a spline curve that passes through a series of points commanded by the micro-machining program and interpolates the path along this curve. This enables high speed and high accuracy machining to be achieved (Figure 6).

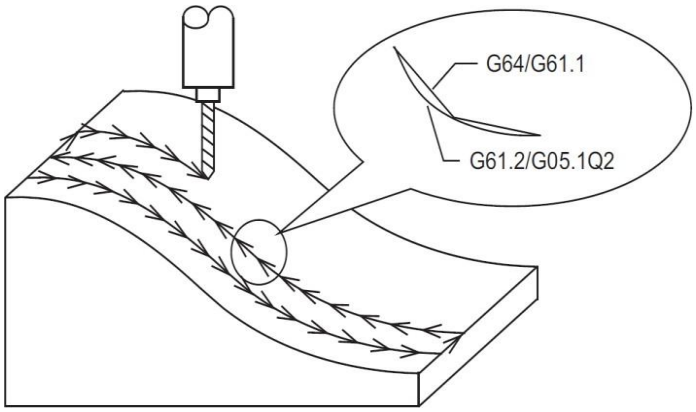

Figure 6. Spline Interpolation

2.2.3. Free Shaped Surface

Airfoils used in aircraft are identified according to their shape and characteristics by a series of numbers developed by the American National Aerodynamic Advisory Committee (NACA) and followed by "NACA". The NACA2412 airfoil used in the experiment was downloaded from the ULUC Airfoil Coordinates Database (Figure 7). Different scallop height values were used in the experimental studies. Scallop height is an important parameter in measuring the surface quality of a component produced on CNC machines (Figure 8).

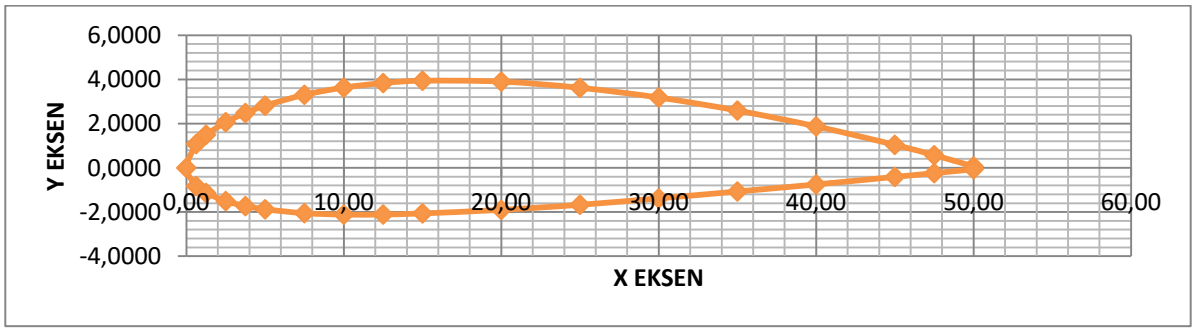

Figure 7. NACA2412

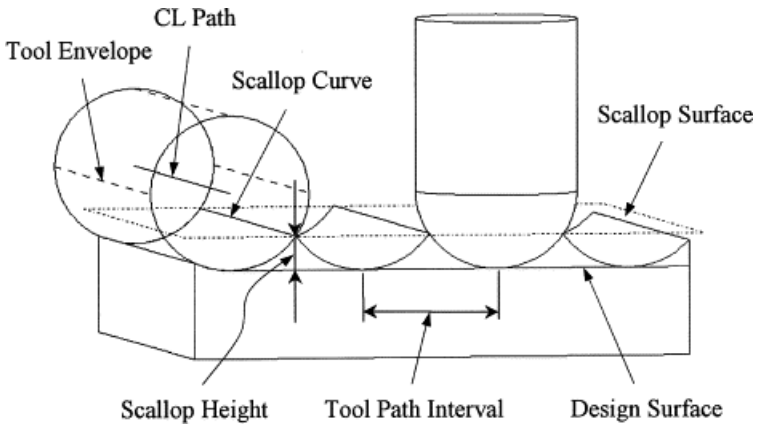

Figure 8. Scallop Height

2.2.4. Processing Method

The experimental parts were machined in 3 stages as rough, semi-finished and finished (Figure 9-11).

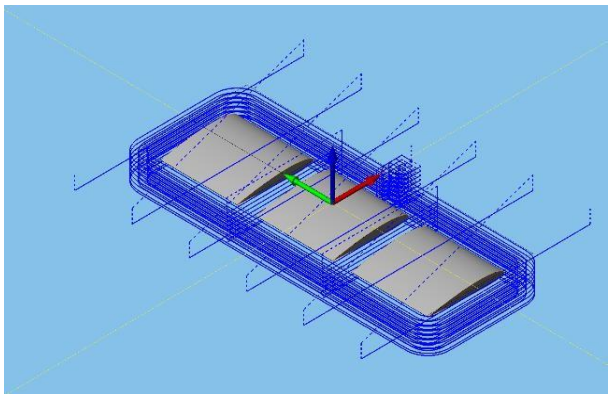

Figure 9. Rough Machining

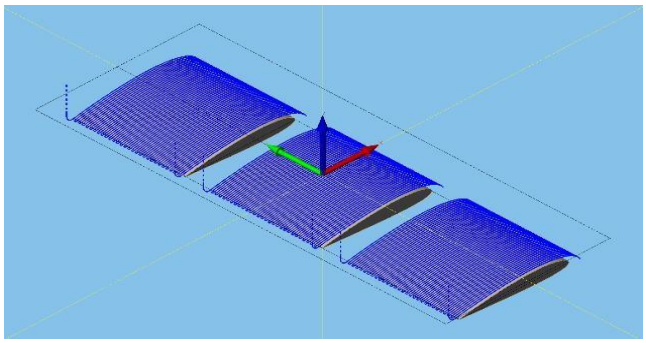

Figure 10. Semi-Finish Machining

Different machining parameters than cutting parameters were used when creating the tool path in finish machining. Different values of cutting width (mm), cutting speed m/mm, feed rate mm/min, machining strategy and fixed step over parameters were used.

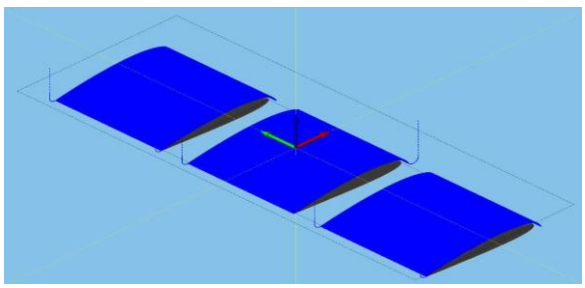

Figure 11. Finish Machining

2.2.5.CUTTING PARAMETERS

The cutting parameters used in the experimental study are given in Table2.

Table 2. Finish Machining Cutting Parameters

Cutting Parameters	Level 1	Level 2	Level 3
Radial Depth of Cut- ae (mm)	0,1	0,05	0,01
Feed rate (mm/min)	150	120	100
Cutting speed (m/min)	150	120	100
Machining Strategy	Zigzag	Zigzag	Zigzag
Depth of Cut - ap (mm)	0,8	0,8	0,8

2.2.6. Taguchi Experiment Design

Experiments were carried out using the Taguchi experimental design method using the L9 orthogonal array (Table 3). Zigzag will be used as the processing strategy in the experiments.

Table 3. Taguchi L9 Orthogonal Experimental Design

Experiment no	Ae	Fz	Vc	Machining Strategy	Step over
Part 1	1	1	1	Zigzag	0,8
Part 2	1	2	2	Zigzag	0,8
Part 3	1	3	3	Zigzag	0,8
Part 4	2	1	2	Zigzag	0,8
Part 5	2	2	3	Zigzag	0,8
Part 6	2	3	1	Zigzag	0,8
Part 7	3	1	3	Zigzag	0,8
Part 8	3	2	1	Zigzag	0,8
Part 9	3	3	2	Zigzag	0,8

2.2.7. CMM Measurement

The measurements of the parts machined on the Komatech CNC machine were made on the Wenzel CMM machine (Figure 12). Revo 5 axis measurement system of Renishaw company was used in the CMM machine. Measurements were made by form structure scanning method. There are a total of 138 (6x23) measurement points for 1 piece.



Figure 12. Wenzel 3D Gantry Cmm

3.Results and Discussion

3.1. Block No. 1 Measurement Results and Form Error Analysis

The same scallop height was used in the finish machining of the 3 parts in block number 1. The scallop height used is 0,000416696 mm.

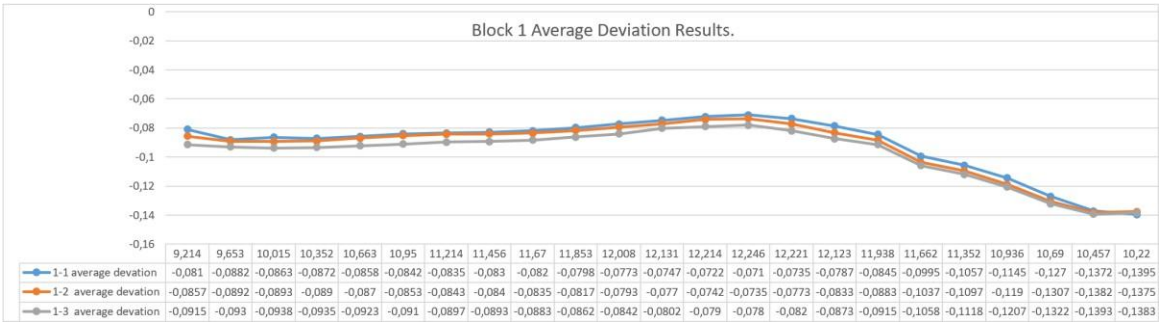

	9,214	9,653	10,015	10,352	10,663	10,95	11,214	11,456	11,67	11,853	12,008	12,131	12,214	12,246	12,221	12,123	11,938	11,662	11,352	10,936	10,69	10,457	10,22
1-1 average devation	-0,081	-0,0882	-0,0863	-0,0872	-0,0858	-0,0842	-0,0835	-0,083	-0,082	-0,0798	-0,0773	-0,0747	-0,0722	-0,071	-0,0735	-0,0787	-0,0845	-0,0995	-0,1057	-0,1145	-0,127	-0,1372	-0,1395
1-2 average devation	-0,0857	-0,0892	-0,0893	-0,089	-0,087	-0,0853	-0,0843	-0,084	-0,0835	-0,0817	-0,0793	-0,077	-0,0742	-0,0735	-0,0773	-0,0833	-0,0883	-0,1037	-0,1097	-0,119	-0,1307	-0,1382	-0,1375
1-3 average devation	-0,0915	-0,093	-0,0938	-0,0935	-0,0923	-0,091	-0,0897	-0,0893	-0,0883	-0,0862	-0,0842	-0,0802	-0,079	-0,078	-0,082	-0,0873	-0,0915	-0,1058	-0,1118	-0,1207	-0,1322	-0,1393	-0,1383

Figure 13. Block 1 Average Deviation Results.

3.2.Block 2 Measurement Results and Form Error Analysis

The same scallop height was used in the finish machining of the 3 parts in block number 2. The scallop height value used is 0,000104168 mm.

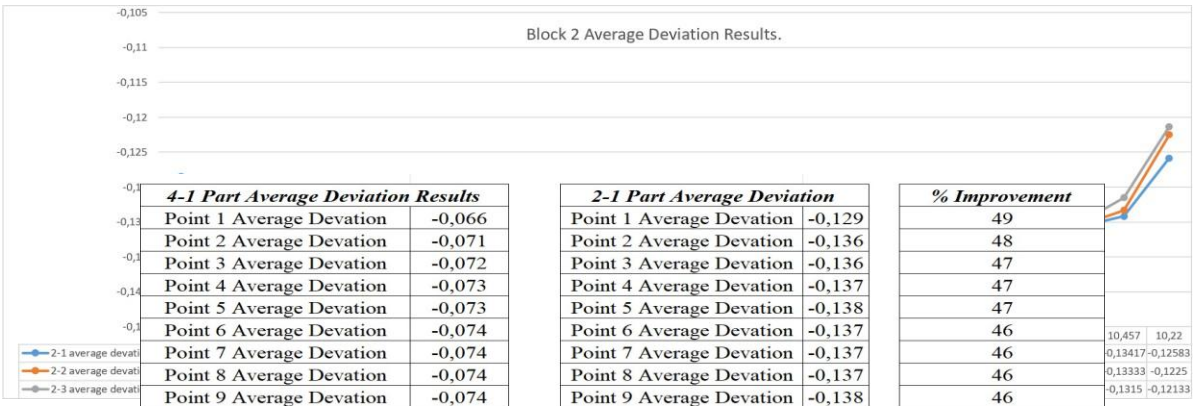

4-1 Part Average Deviation Results	
Point 1 Average Devation	-0,066
Point 2 Average Devation	-0,071
Point 3 Average Devation	-0,072
Point 4 Average Devation	-0,073
Point 5 Average Devation	-0,073
Point 6 Average Devation	-0,074
Point 7 Average Devation	-0,074
Point 8 Average Devation	-0,074
Point 9 Average Devation	-0,074
Point 10 Average Devation	-0,073
Point 11 Average Devation	-0,073
Point 12 Average Devation	-0,075
Point 13 Average Devation	-0,076
Point 14 Average Devation	-0,075
Point 15 Average Devation	-0,075
Point 16 Average Devation	-0,070
Point 17 Average Devation	-0,066
Point 18 Average Devation	-0,067
Point 19 Average Devation	-0,061
Point 20 Average Devation	-0,058
Point 21 Average Devation	-0,061
Point 22 Average Devation	-0,064
Point 23 Average Devation	-0,060

2-1 Part Average Deviation	
Point 1 Average Devation	-0,129
Point 2 Average Devation	-0,136
Point 3 Average Devation	-0,136
Point 4 Average Devation	-0,137
Point 5 Average Devation	-0,138
Point 6 Average Devation	-0,137
Point 7 Average Devation	-0,137
Point 8 Average Devation	-0,137
Point 9 Average Devation	-0,138
Point 10 Average Devation	-0,137
Point 11 Average Devation	-0,136
Point 12 Average Devation	-0,136
Point 13 Average Devation	-0,136
Point 14 Average Devation	-0,136
Point 15 Average Devation	-0,135
Point 16 Average Devation	-0,134
Point 17 Average Devation	-0,134
Point 18 Average Devation	-0,139
Point 19 Average Devation	-0,134
Point 20 Average Devation	-0,133
Point 21 Average Devation	-0,136
Point 22 Average Devation	-0,134
Point 23 Average Devation	-0,126

% Improvement
49
48
47
47
47
46
46
46
46
47
46
45
44
45
45
48
51
52
54
56
55
53
53

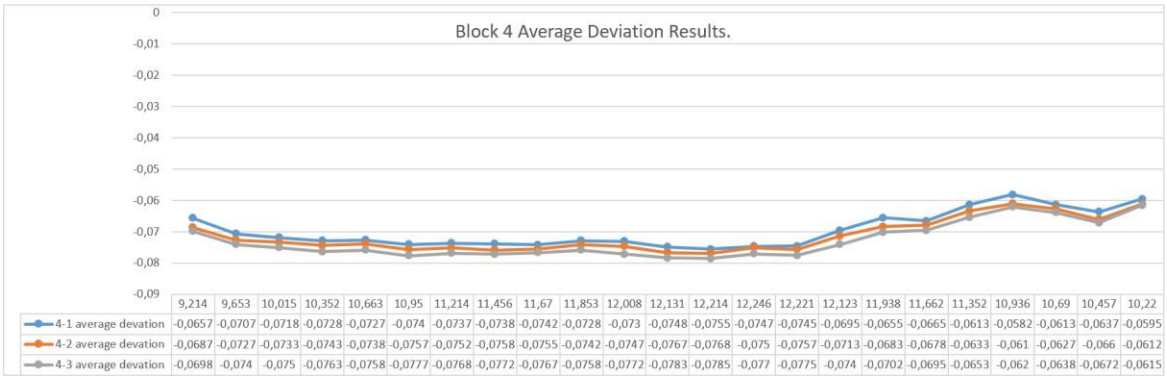

	9,214	9,653	10,015	10,352	10,663	10,95	11,214	11,456	11,67	11,853	12,008	12,131	12,214	12,246	12,221	12,123	11,938	11,662	11,352	10,936	10,69	10,457	10,22
4-1 average devation	-0,0657	-0,0707	-0,0718	-0,0728	-0,0727	-0,074	-0,0737	-0,0738	-0,0742	-0,0728	-0,073	-0,0748	-0,0755	-0,0747	-0,0745	-0,0695	-0,0655	-0,0665	-0,0613	-0,0582	-0,0613	-0,0637	-0,0595
4-2 average devation	-0,0687	-0,0727	-0,0733	-0,0743	-0,0738	-0,0757	-0,0752	-0,0758	-0,0755	-0,0742	-0,0747	-0,0767	-0,0768	-0,075	-0,0757	-0,0713	-0,0683	-0,0678	-0,0633	-0,061	-0,0627	-0,066	-0,0612
4-3 average devation	-0,0698	-0,074	-0,075	-0,0763	-0,0758	-0,0777	-0,0768	-0,0772	-0,0767	-0,0758	-0,0772	-0,0783	-0,0785	-0,077	-0,0775	-0,074	-0,0702	-0,0695	-0,0653	-0,062	-0,0638	-0,0672	-0,0615

Figure 14. Block 2 Average Deviation Results.

3.3.Results of the Part Machined with Precision Machining Commands and Analysis of Form Defects

Block 2 was found to have the highest number of form defects among the 3 blocks processed. A new block was machined using the cutting conditions used in the machining of block 2. In this new block machining, the high-speed- high-precision control mode II (G05 P1000), overlay function and spline interpolation (G05.1 Q2/Q0) commands were actively used. These commands activated the intelligent machining modes on the machine tool.

Figure 16. Block 4 Average Deviation Results.

After the analysis, it was determined that the effects of intelligent machining machine features on the form defects occurring in the machining of freeform surfaces were positive. It was seen that there was a significant improvement in form defects when the features were used.

Figure 17. Percentage improvement of 2-1 part

4-2 Part Average Deviation Results	
Point 1 Average Devation	-0,069
Point 2 Average Devation	-0,073
Point 3 Average Devation	-0,073
Point 4 Average Devation	-0,074
Point 5 Average Devation	-0,074
Point 6 Average Devation	-0,076
Point 7 Average Devation	-0,075
Point 8 Average Devation	-0,076
Point 9 Average Devation	-0,076
Point 10 Average Devation	-0,074
Point 11 Average Devation	-0,075
Point 12 Average Devation	-0,077
Point 13 Average Devation	-0,077
Point 14 Average Devation	-0,075
Point 15 Average Devation	-0,076
Point 16 Average Devation	-0,071
Point 17 Average Devation	-0,068
Point 18 Average Devation	-0,068
Point 19 Average Devation	-0,063
Point 20 Average Devation	-0,061
Point 21 Average Devation	-0,063
Point 22 Average Devation	-0,066
Point 23 Average Devation	-0,061

2-2 Part Average Deviation	
Point 1 Average Devation	-0,132
Point 2 Average Devation	-0,134
Point 3 Average Devation	-0,135
Point 4 Average Devation	-0,137
Point 5 Average Devation	-0,137
Point 6 Average Devation	-0,135
Point 7 Average Devation	-0,134
Point 8 Average Devation	-0,136
Point 9 Average Devation	-0,138
Point 10 Average Devation	-0,137
Point 11 Average Devation	-0,136
Point 12 Average Devation	-0,136
Point 13 Average Devation	-0,136
Point 14 Average Devation	-0,136
Point 15 Average Devation	-0,137
Point 16 Average Devation	-0,135
Point 17 Average Devation	-0,135
Point 18 Average Devation	-0,141
Point 19 Average Devation	-0,136
Point 20 Average Devation	-0,135
Point 21 Average Devation	-0,136
Point 22 Average Devation	-0,133
Point 23 Average Devation	-0,133

% Improvement
48
46
46
46
46
44
44
44
45
46
45
44
43
45
45
47
49
52
53
55
54
51
54

Figure 18. Percentage improvement of 2-2 part

4-3 Part Average Deviation Results	
Point 1 Average Devation	-0,070
Point 2 Average Devation	-0,074
Point 3 Average Devation	-0,075
Point 4 Average Devation	-0,076
Point 5 Average Devation	-0,076
Point 6 Average Devation	-0,078
Point 7 Average Devation	-0,077
Point 8 Average Devation	-0,077
Point 9 Average Devation	-0,077
Point 10 Average Devation	-0,076
Point 11 Average Devation	-0,077
Point 12 Average Devation	-0,078
Point 13 Average Devation	-0,079
Point 14 Average Devation	-0,077
Point 15 Average Devation	-0,078
Point 16 Average Devation	-0,074
Point 17 Average Devation	-0,070
Point 18 Average Devation	-0,070
Point 19 Average Devation	-0,065
Point 20 Average Devation	-0,062
Point 21 Average Devation	-0,064
Point 22 Average Devation	-0,067
Point 23 Average Devation	-0,062

2-3 Part Average Deviation	
Point 1 Average Devation	-0,142
Point 2 Average Devation	-0,142
Point 3 Average Devation	-0,144
Point 4 Average Devation	-0,144
Point 5 Average Devation	-0,144
Point 6 Average Devation	-0,143
Point 7 Average Devation	-0,143
Point 8 Average Devation	-0,144
Point 9 Average Devation	-0,144
Point 10 Average Devation	-0,144
Point 11 Average Devation	-0,143
Point 12 Average Devation	-0,141
Point 13 Average Devation	-0,141
Point 14 Average Devation	-0,142
Point 15 Average Devation	-0,142
Point 16 Average Devation	-0,138
Point 17 Average Devation	-0,137
Point 18 Average Devation	-0,143
Point 19 Average Devation	-0,137
Point 20 Average Devation	-0,135
Point 21 Average Devation	-0,135
Point 22 Average Devation	-0,132
Point 23 Average Devation	-0,121

% Improvement
51
48
48
47
47
45
46
46
47
47
46
45
44
46
46
46
49
52
52
54
53
49
49

Figure 19. Percentage improvement of 2-3 parts

As a result of using G05 P10000 (High Speed - High Precision Control Mode Active) and G05.1 Q2 (Spline Interpolation Mode Active) commands, improvements between 56% and 45% in the 1st part, 57% and 45% in the 2nd part, 56% and 46% in the 3rd part were achieved. High Speed - High Precision commands improved the form errors by 50% on average.

4. Conclusions

When the CMM reports of the experimental study were examined, it was determined that the CNC machine used in the experiment had good precision and repeatability. For each block, 4 separate Ø 6 sphere tools were used. In this way, it was aimed to minimize the form errors due to tool wear. According to the CMM report results, it was seen that the form defects of the parts machined in block 1 and block 3 were low. It was determined that the cutting conditions used in the machining of these parts had little effect on the form defects. In block 2, it was determined that the form defects were high and the effect of the cutting conditions used on the form defects was high. Block 4, which was machined using block 2 cutting conditions and G05 P10000 (High Speed-High Accuracy Control Mode Active) and G05.1 Q2 (Spline Interpolation Mode Active) codes, showed a noticeable improvement in form errors.

5. References

[1].Choi,Y-K. ; Banerjee, A., (2007) "Tool Path Generation And Tolerance Analysis For Free-Form Surfaces", I.J. of Machine Tools&Manufacture 47 689-696

[2].Erdim, H.; Lazoğlu, I.; Kaymakçı, M.,((2007))"Free-Form Surface Machining And Comparing Feedrate Scheduling Strategies", Machining Science and Technology, 11, 117-133

[3].Abbas, T.(2009), Automatic Tool Path Generation for Parametric Surfaces in Terms of Bezier Patches. Eng.&Tech. Journal, Vol.27, No.4.

[4].Can A., Ünüvar A., (2010)Five-axis tool path generation for 3D curves created by projection on B-spline surfaces. Int J Adv Manuf Technol. 49: 1047-1057,

[5].Agrawal, R.K.; Pratihar, D.K.; Choudhury, A., R., "Optimization Of CNC Isoscallop Free Form Surface Machining Using A Genetic Algorithm", I.J. of Machine Tools&Manufacture 46 (2006) 811-819

[6].Farouki, R.T.,(2014) Accuracy enhancements for CNC motion control through algorithms based on analytic path geometry. SMART 2014, Pontignano, September 28–October , Italy,.