scientific reports

Check for updates

OPEN

Psychometric properties of the Turkish version of the health literacy scale for preconception care

Özlem Can Gürkan[1]✉, Tuğba Bozdemir[2], Eda Şimşek Şahin[3] & Hatice Yıldız[1]

This study aimed to evaluate the validity and reliability of the Turkish version of the Health Literacy Scale for Preconceptional Care (HLSPC). This scale provides information on the general population's current state of preconception care health literacy. This study, designed as a methodological study, was conducted with 246 participants. The HLSPC scale comprises two sections. The first section, CFA goodness-of-fit values were: $\chi^2 = 200.67$, $\chi^2/df = 1.98$, GFI = 0.92, CFI = 0.93, AGFI = 0.89, NFI = 0.88, RMSEA = 0.05. The scale's six-factor structure remained constant, with latent variable factor loadings ranging from 0.33 to 0.87 (t: 4.81/11.96; $p < 0.001$). Significant differences in overall scale scores and subscales were seen between the top and bottom 27% groups ($p < 0.001$). The HLSPC's Cronbach's Alpha coefficient was 0.86, with subscale values ranging from 0.58 to 0.80, and test–retest findings showed high performance. The K-20 index for the second section was 0.66. The Turkish version of HLSPC is a valid and reliable measurement tool aimed at assessing preconception health literacy in the Turkish population.

Keywords Preconception care, Health literacy, Turkish validity-reliability

Health literacy is linked to literacy and entails people's knowledge, motivation, and competences to access, understand, appraise, and apply health information in order to make judgements and take decisions in everyday life concerning health care, disease prevention, and health promotion to maintain or improve quality of life during the life course[1]. This definition highlights the dynamic and comprehensive nature of health literacy, encompassing not only the ability to read and understand health information but also the motivation and skills to use it effectively. Furthermore, this aligns with the World Health Organization's (2013) emphasis on health literacy as a critical determinant of health that empowers individuals to manage their health effectively[2]. Factors such as gender, age, education, socioeconomic status, and place of residence significantly influence health literacy levels[1,3,4]. Although levels vary across countries, health literacy is generally low worldwide, representing a significant public health concern[1,5].

In Turkey, while comprehensive national data on health literacy are limited, the Ministry of Health's 2023 Health Statistics Yearbook reports nearly 974 million physician visits, highlighting the population's substantial engagement with healthcare services[6]. This high utilization rate underscores the need for improved health literacy to ensure effective use of health information and services. Maternal health indicators reveal ongoing challenges; the maternal mortality ratio stands at 13.5 per 100,000 live births, and neonatal mortality is 6.0 per 1000 live births[6]. These figures indicate critical areas for public health improvement.

Women are key figures in public health, as their health decisions influence not only their own well-being but also that of their families and future generations. Due to physiological processes such as pregnancy and childbirth, women face specific health risks, underscoring the need to improve their health literacy.[4,7–9] Particularly in the preconception and prenatal periods, low health literacy is linked to delayed or insufficient antenatal care, risky behaviors, and suboptimal maternal and child health outcomes.[4,10] In contrast, higher health literacy supports timely access to healthcare, better self-management, and healthier choices such as appropriate vitamin use,

[1]Nursing Division, Department of Obstetrics and Gynecology NursingFaculty of Health Sciences, Marmara University, Başıbüyük Mah. Maltepe Başıbüyük Yolu Sk. No:9, Maltepe, 34854 Istanbul, Turkey. [2]School of Nursing, Maltepe University, Marmara Education Village, Istanbul, Turkey. [3]Department of Obstetrics and Gynecology Nursing, Faculty of Health Sciences, Kocaeli University, Kocaeli, Turkey. ✉email: ozlemcan@marmara.edu.tr; ozlemcangurkan@gmail.com

breastfeeding, smoking cessation, and medication adherence.[10,11] It has also been associated with improved nutrition, physical activity, and better neonatal outcomes[12].

Improving health literacy during the preconception period is therefore essential for assessing and reducing both short- and long-term risks to maternal and child health.[10,13] However, tools to assess the needs of women and men of reproductive age during this period are generally inadequate[13,14].

The Turkish Ministry of Health's 2024–2028 Strategic Plan prioritizes enhancing healthcare quality, strengthening health literacy, and improving maternal and child health outcomes.[15] Despite these efforts, valid and reliable tools to assess preconception health literacy among reproductive-aged women and men remain lacking in Turkey, limiting targeted interventions.

The Health Literacy Scale for Preconception Care (HLSPC), developed by Suto et al.[13], in Japan in 2021, enables the assessment of knowledge and skills related to preconception care among women and men of reproductive age, and can help evaluate interventions in both primary care and public health settings[13].

This study aims to translate the HLSPC into Turkish and conduct a psychometric evaluation of the HLSPC among women and men of reproductive age in Türkiye.

Research question

Is the HLSPC a valid and reliable measurement scale for Turkish society?

Methods

Study design

The methodological study design was used in this study.

Setting and participants

Study data was collected through online between October 2023 and April 2024 by Newman's online data collection recommendations, taking into account in Türkiye[16]. It has also been stated that the number of samples in factor analysis should be 5 to 10 times the number of items.[17] The inclusion criteria for this included the following: (1) aged of 18 and 49; (2) not having undergone natural or surgical menopause; (3) are not pregnant themselves and whose partners are not pregnant. The exclusion criteria were the following: (1) younger than 18 or older than 49; (2) completed the survey form incompletely were excluded.

A total of 249 individuals participated in the study; however, 3 participants who did not meet the eligibility criteria were excluded, resulting in a final sample size of 246.

Instruments

Data were collected using a Descriptive Information Form and the Health Literacy Scale for Preconception Care (HLSPC).

Descriptive information form The researchers prepared the descriptive information form in line with the relevant literature[13,14]. The descriptive information form contains nine questions about sociodemographic status, general health status, data on previous pregnancies or thoughts of pregnancy.

The health literacy scale for preconception care Developed by Suto et al.[13], the HLSPC scale comprises two sections. The first section of the HLSPC was designed to cover four areas of health literacy competencies (accessing, understanding, evaluating and applying health information). It was named the Health Literacy Behavior *and* Skills Scale of Preconception Care. The first section of the HLSPC consists of 6 factors and 17 items and is scored on a 4-point Likert. The second section of the HLSPC is called the The Knowledge Scale for Preconception Care. This section of the HLSPC contains 13 multiple-choice items regarding preconceptional care knowledge. Responses to these items are scored as correct (1) or incorrect (0). The Cronbah's Alpha of the HLSPC first section is 0.91, and the Cronbah's Alpha of the second section is 0.66.

Language Validity During the process of translating the scale into Turkish, two translators with expertise in English language and literature independently carried out the translation. The translations were compared by the researchers, and linguistic, semantic, idiomatic, conceptual, and contextual similarities and differences were assessed. Following these evaluations, a consensus was reached on the phrasing of the items. Two additional experts, also from the field of English language and literature, performed back translations, which were not part of the initial translation. These back translations were compared with the original scale, and it was determined that they were equivalent in terms of language, meaning, and expression, with no need for further adaptation. To verify the content and language validity of the study, feedback was obtained from 10 experts specializing in nursing or women's health and diseases nursing, and validity calculations were conducted using the Polit and Beck method based on a 4-point likert-type rating[18].

Pilot study The final version of the Turkish HLSPC was administered to a small pilot group of 30 individuals to evaluate its language and clarity, and no changes were found necessary. Feedback from these participants was not included in the statistical analysis.

Data collection

Instruments were converted into an online survey using Google Forms. Written consent was obtained via an informed consent form on the start page of the online survey. Measures were taken to prevent repeated participation. In order to assess reliability, the Turkish version of the HLSPC was applied to the same volunteers online 2 weeks later, and 30 people completed the forms. During the online data collection process, participants were asked to create and use a pseudonym when completing the form. Participants who completed the retest in the second week were identified based on their pseudonyms.[19]

Statistical analysis

The study was conducted as follows in line with the relevant literatüre[20–22]. During the data analysis phase, SPSS 26 software was utilized for descriptive statistics, while AMOS 23 software was employed to evaluate model fit. Statistical significance was set at $p < 0.05$. Descriptive statistics, including frequency, mean, and standard deviation (SD), were calculated to summarize the socio-demographic and obstetric characteristics of the participants. The dataset's suitability for analysis, as well as the normality and factorability of the scale, were assessed using the Kaiser-Meyer-Olkin (KMO) measure and Bartlett's Test of Sphericity. Content validity was evaluated through Item-Level Content Validity Index (I-CVI), Scale-Level Content Validity Index/Universal Agreement (S-CVI/UA), and Scale-Level Content Validity Index/Average (S-CVI/A). For construct validity, a first-order multifactor Confirmatory Factor Analysis (CFA) was performed. The model fit was evaluated using factor loadings and a range of goodness-of-fit indices, including chi-square statistic (χ2), chi-square/degree of freedom ratio (χ2/df), Goodness-of-Fit Index (GFI), Comparative Fit Index (CFI), Adjusted Goodness-of-Fit Index (AGFI), Normed Fit Index (NFI), and Root Mean Square Error of Approximation (RMSEA). Independent samples t tests were applied to assess internal consistency, while reliability was examined using test–retest reliability and Cronbach's Alpha coefficients. The temporal stability of the Turkish version of the "Health Literacy Behavior and Skills Scale for Preconception Care" was assessed using the Pearson Product-Moment Correlation Coefficient during the test–retest reliability analysis[23].

The item difficulty and discrimination indices of the "Knowledge Scale for Preconception Care" section were analyzed using the Henryson Method. According to the Henryson Method, the item difficulty index is calculated as the ratio of participants who answered the item correctly to the total number of respondents $Pj = \frac{n(D)}{n}$. In this study, the item discrimination index was calculated using Henryson's formula[24]

$$r_{\{jx\}} = \frac{\overline{X}\ (d) - \overline{X}}{s_x}\sqrt{\frac{p_j}{q_j}}.$$

The reliability of the multiple-choice "Knowledge Scale for Preconception Care" section of the HLSPC was calculated using the Kuder Richardson-20 (KR-20) reliability coefficient, which is recommended for items scored dichotomously (1-0). The formula is as follows: $\mathrm{KR} - 20 = \frac{\mathrm{K}}{\mathrm{K}-1}\left(1 - \frac{\sum \mathrm{pq}}{\mathrm{S}_\mathrm{x}^2}\right)$ (K: Total number of items in the test, p: Proportion of correct answers for each item, q: Proportion of incorrect answers for each item (q = 1−p), S_x^2: Variance of the total test scores)[24].

Ethics

Written permission was obtained from the researchers who developed the HLSPC. Ethical approval was received from the Maltepe University Ethics Committee (Date/Protocol number: 02.03.2023/05–10). Written consent was obtained from the participants via an informed volunteer form. The principles of the Declaration of Helsinki were used to conduct the study.

Results

Participants' characteristics

The participants, 81.70% ($n = 201$) were women, and 18.30% ($n = 45$) were men. The mean age of women was 32.40 ± 10.97, of men was 25.40 ± 8.79 years. The majority of participants and their spouses/partners were university graduates (80.90% ($n = 199$) and 50.80% ($n = 125$), respectively). Among the women, 47.20% ($n = 116$) were employed, and more than half (60.20% ($n = 148$)) reported that their income was equal to their expenses. Additionally, 52.40% ($n = 129$) of the participants were married, with a mean marriage duration of 13.80 ± 10.49 months.

Validity and reliability findings of "The Health Literacy Behavior and Skills Scale of Preconception Care" section

Content validity

The scale evaluated using the Polit and Beckmethod showed I-CVI values ranging between 0.90 and 1.00. S-CVI/UA was 0.82, while S-CVI/Ave was 0.98[18]. No changes were made to the items. Kendall's W coefficient of concordance was 0.20, with a significance level of $p < 0.001$.

Construct validity

In the study, the KMO measure was 0.82, and Bartlett's test of sphericity yielded $\chi^2 = 1470.11$ with $p < 0.001$. According to the results of the CFA diagram, the goodness-of-fit indices for the scale were as follows: $\chi^2 = 200.67$ ($p < 0.001$), $\chi^2/df = 1.98$. The GFI was 0.92, the CFI was 0.93, the AGFI was 0.89, the NFI was 0.88, and the RMSEA was 0.05 (Fig. 1).

The factor loadings and significance of the latent variables in the scale were examined using CFA, and it was found that all variables had factor loadings ranging from 0.33 to 0.87, contributing significantly to the scale (t: 4.81 / 11.96; $p < 0.001$) (Table 1).

Reliability analysis

The factor loadings of the items in the scale were above 0.30, and the values exceeded 0.20. All items have statistically significant factor loadings ($p < 0.001$), which supports the model's fit to the data. Therefore, no items were removed from the scale (Table 1). Additionally, a statistically significant difference was observed between the lower 27.00% and upper 27.00% groups in the total score and sub dimensions of the scale ($p < 0.001$) (Table 2).

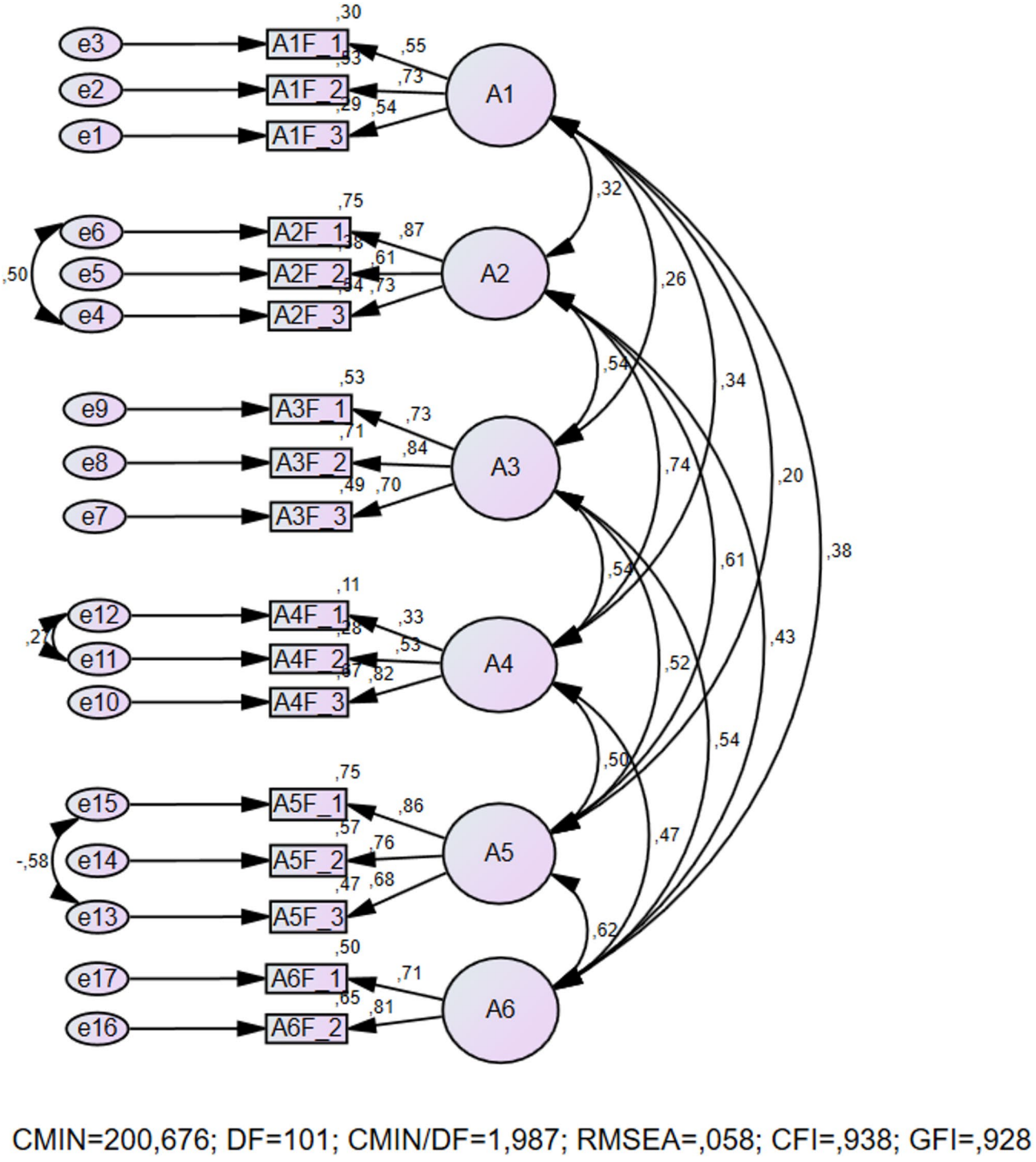

Fig. 1. First-order multifactor confirmatory factor analysis (CFA) diagram of the scale structure. Model $p < 0.05$.

Cronbach's alpha reliability coefficient and split-half test consistency results

The total Cronbach's Alpha value for the scale was 0.86, while the Cronbach's Alpha values for the sub dimensions were F1: 0.58, F2: 0.74, F3: 0.80, F4: 0.65, F5: 0.76, and F6: 0.71. In the analysis conducted for the upper and lower groups of the scale, significant differences were observed between the groups for each factor ($p < 0.001$) (Table 2).

Item-total and subscale correlations

In order to evaluate the validity and reliability of the scale used in the study, item-item correlations, corrected item-total correlations, inter-subscale correlations, and subscale-total score correlations were examined. The correlation coefficients between the scale items ranged from 0.01 to 0.65; the corrected item-total correlations

No	$\bar{x}$	SD	Factor loading	Estimates	S.E.	t	*p*
A1F_1	1.37	0.58	0.55	0.91	0.15	5.97	0.00
A1F_2	1.26	0.47	0.73	1.01	0.16	5.99	0.00
A1F_3	1.28		0.54	1.00			
A2F_1	2.22	0.85	0.87	1.15	0.11	10.47	0.00
A2F_2	2.10	0.84	0.61	0.81	0.09	8.18	0.00
A2F_3	1.93		0.73	1.00			
A3F_1	2.00	0.88	0.73	0.93	0.08	10.81	0.00
A3F_2	2.04	0.88	0.84	1.12	0.09	11.58	0.00
A3F_3	2.28		0.70	1.00		10.81	0.00
A4F_1	1.97	1.05	0.33	0.44	0.09	4.81	0.00
A4F_2	1.82	0.94	0.53	0.62	0.08	7.28	0.00
A4F_3	2.10		0.82	1.00			
A5F_1	2.26	1.04	0.86	1.27	0.13	9.65	0.00
A5F_2	2.41	1.08	0.76	1.14	0.12	9.47	0.00
A5F_3	2.60		0.68	1.00			
A6F_1	2.50	1.24	0.71	1.01	0.10	9.38	0.00
A6F_2	2.16		0.81	1.00			

Table 1. Results of confirmatory factor analysis. $\bar{x}$ mean, *SD* standard deviation, *S.E.* standard error, *A1F_1, A2F_2, A6F_1* etc., Item codes by factor

HLSPC factors and total	Group	*n*	$\bar{x}$	SD	t	*p*	Cronbah's alpha
F1	Upper group	66	4.68	1.55	6.58	0.00	0.58
	Lower group		3.30	0.70			
F2	Upper group	66	8.12	1.83	13.20	0.00	0.74
	Lower group		4.53	1.24			
F3	Upper group	66	8.47	2.14	13.70	0.00	0.80
	Lower group		4.26	1.29			
F4	Upper group	66	7.97	1.92	13.08	0.00	0.65
	Lower group		4.11	1.44			
F5	Upper group	66	9.86	1.74	18.55	0.00	0.76
	Lower group		4.73	1.42			
F6	Upper group	66	6.55	1.54	14.99	0.00	0.71
	Lower group		2.85	1.28			
Total	Upper group	66	45.65	4.24	33.493	0.00	0.86
	Lower group		23.77	3.20			

Table 2. Reliability analysis results of the scale. *HLSPC* Health Literacy Scale for Preconception Care, $\bar{x}$ mean, *SD* standard deviation, *F* factor

ranged from 0.23 to 0.60; the inter-subscale correlation coefficients ranged from 0.20 to 0.55; and the correlation coefficients between the subscales and the total scale score ranged from 0.42 to 0.79 (Table 3).

Test–retest analysis

In the evaluation of test–retest measurements of the HLSPC, a strong ($r \geq 0.70$) and significant relationship ($p < 0.001$) was found between the two measurements for 12 items, while a moderate ($r = 0.30–0.69$) and significant relationship was identified for the remaining five items ($p < 0.05$ / $p < 0.001$, Table 4).

Validity and reliability findings of the "knowledge scale for preconception care" section

As a result of the item difficulty analyses, it was determined that two items (Items 3 and 4) were difficult ($p(J) \leq 0.29$). One item (Item 11) was moderately difficult ($p(J) = 0.30 - 0.49$), three items (Items 1, 2, and 12) were easy ($p(J) = 0.50 - 0.69$), and seven items (Items 5, 6, 7, 8, 9, 10, and 13) were very easy ($p(J) = 0.70 - 1$). When the Item Discrimination Index was evaluated, 10 items were classified as very good ($r(jx) \geq 0.40$), 2 items were acceptable ($r(jx) = 0.30 - 0.39$), and 1 item was weak ($r(jx) \leq 0.19$). The reliability analysis of the HLSPC was evaluated using the KR-20 method, and the KR-20 value was determined to be 0.66 (Table 5).

Corrected item-total correlations and inter-item correlations																			
Item	**Corrected Item Total Correlation (*r*)**	**A1F_1 (*r*)**	**A1F_2 (*r*)**	**A1F_3 (*r*)**	**A2F_1 (*r*)**	**A2F_2 (*r*)**	**A2F_3 (*r*)**	**A3F_1 (*r*)**	**A3F_2 (*r*)**	**A3F_3 (*r*)**	**A4F_1 (*r*)**	**A4F_2 (*r*)**	**A4F_3 (*r*)**	**A5F_1 (*r*)**	**A5F_2 (*r*)**	**A5F_3 (*r*)**	**A6F_1 (*r*)**	**A6F_2 (*r*)**
A1F_1	0.29**	1	0.40**	0.32**	0.05	0.14*	0.20**	0.17**	0.13*	0.18**	0.05	0.20**	0.13*	0.18**	0.19**	0.15*	0.22**	0.18**
A1F_2	0.23**		1	0.27**	0.14*	0.11	0.29**	0.11	0.13*	0.11	-0.06	0.18**	0.19**	0.07	0.06	0.04	0.18**	0.13*
A1F_3	0.23**			1	0.10	-0.01	0.11	0.17**	0.08	0.21**	0.08	0.24**	0.08	0.17**	0.18**	0.01	0.14*	0.12
A2F_1	0.60**				1	0.53**	0.48**	0.33**	0.42**	0.45**	0.21**	0.30**	0.54**	0.46**	0.32**	0.38**	0.28**	0.28**
A2F_2	0.45**					1	0.46**	0.22**	0.29**	0.19**	0.12	0.24**	0.34**	0.36**	0.35**	0.28**	0.19**	0.23**
A2F_3	0.54**						1	0.27**	0.30**	0.33**	0.21**	0.32**	0.43**	0.39**	0.36**	0.28**	0.18**	0.31**
A3F_1	0.52**							1	0.65**	0.48**	0.20**	0.19**	0.26**	0.34**	0.28**	0.30**	0.27**	0.41**
A3F_2	0.57**								1	0.59**	0.23**	0.28**	0.33**	0.32**	0.31**	0.33**	0.27**	0.34**
A3F_3	0.57**									1	0.27**	0.28**	0.38**	0.36**	0.35**	0.28**	0.27**	0.31**
A4F_1	0.39**										1	0.41**	0.28**	0.24**	0.25**	0.28**	0.26**	0.31**
A4F_2	0.42**											1	0.48**	0.18**	0.20**	0.14*	0.14*	0.13*
A4F_3	0.55**												1	0.33**	0.26**	0.30**	0.28**	0.28**
A5F_1	0.60**													1	0.70**	0.37**	0.30**	0.46**
A5F_2	0.59**														1	0.47**	0.37**	0.43**
A5F_3	0.53**															1	0.44**	0.42**
A6F_1	0.49**																1	0.57**
A6F_2	0.57**																	1

Scale-total correlations and interscale correlations							
Subscale	**Scale_total_correlation (r)**	**F1 (r)**	**F2 (r)**	**F3 (r)**	**F4 (r)**	**F5 (r)**	**F6 (r)**
F1	0.42**	1.00**	0.20**	0.23**	0.21**	0.20**	0.25**
F2	0.74**	0.20**	1.00**	0.45**	0.48**	0.53**	0.34**
F3	0.74**	0.23**	0.45**	1.00**	0.41**	0.46**	0.41**
F4	0.70**	0.21**	0.48**	0.41**	1.00**	0.38**	0.34**
F5	0.79**	0.20**	0.53**	0.46**	0.38**	1.00**	0.55**
F6	0.70**	0.25**	0.34**	0.41**	0.34**	0.55**	1.00**

Table 3. Item-total and subscale correlations. *A1F_1, A2F_2, A6F_1*, etc., Item codes by factor, *F* factor, *r* correlation $^{*}p < 0.05$, $^{**}p < 0.01$.

Items	Pre test $\bar{x} \pm SD$	Post test $\bar{x} \pm SD$	Item-total score Correlation coefficients	
			r	*p*
A1F_1	1.53 ± 0.68	1.53 ± 0.68	0.62	< 0.001
A1F_2	1.30 ± 0.53	1.23 ± 0.50	0.75	< 0.001
A1F_3	1.50 ± 0.77	1.60 ± 0.93	0.38	< 0.05
A2F_1	2.37 ± 0.99	2.13 ± 1.00	0.66	< 0.001
A2F_2	2.13 ± 1.00	2.13 ± 0.97	0.96	< 0.001
A2F_3	2.07 ± 1.04	2.07 ± 0.98	0.76	< 0.001
A3F_1	2.17 ± 0.83	1.93 ± 0.82	0.71	< 0.001
A3F_2	2.10 ± 1.02	2.13 ± 1.13	0.90	< 0.001
A3F_3	2.13 ± 1.04	2.10 ± 1.12	0.90	< 0.001
A4F_1	2.50 ± 1.04	2.50 ± 1.07	0.87	< 0.001
A4F_2	2.00 ± 0.98	1.83 ± 0.95	0.85	< 0.001
A4F_3	1.83 ± 0.98	1.80 ± 0.99	0.45	< 0.05
A5F_1	2.33 ± 1.02	2.20 ± 0.99	0.53	< 0.05
A5F_2	2.33 ± 0.95	2.10 ± 0.96	0.72	< 0.001
A5F_3	2.37 ± 0.96	2.40 ± 0.96	0.85	< 0.001
A6F_1	2.30 ± 1.14	2.27 ± 1.23	0.92	< 0.001
A6F_2	2.23 ± 1.10	2.23 ± 1.04	0.85	< 0.001

Table 4. Test–retest item-total score correlation $\bar{x}$ mean, *SD* standard deviation, *r* Pearson correlation, *A1F_1, A2F_2, A6F_1* etc., Item Codes by Factor

Item	Item difficulty index $p_{(j)}$		Item discrimination index $r_{(jx)}$		KR-20 Index
1	0.66	Easy	0.57	Excellent	0.66
2	0.67	Easy	0.53	Excellent	
3	0.28	Difficult	0.17	Very Weak	
4	0.28	Difficult	0.32	Acceptable	
5	0.86	Very easy	0.48	Excellent	
6	0.90	Very easy	0.43	Excellent	
7	0.92	Very easy	0.45	Excellent	
8	0.90	Very easy	0.63	Excellent	
9	0.90	Very easy	0.67	Excellent	
10	0.94	Very easy	0.49	Excellent	
11	0.37	Moderate difficulty	0.43	Excellent	
12	0.65	Easy	0.53	Excellent	
13	0.74	Very easy	0.36	Acceptable	

Table 5. HLSPC knowledge test item difficulty, item discrimination, and KR-20 index results. *HLSPC* Health Literacy Scale for Preconception Care, *KR-20 Index* Kuder Richardson-20 reliability coefficient

Discussion

This study is the Turkish validity and reliability adaptation of the HLSPC developed by Suto et al.[13]. The 6-factor, 17-item structure of the "Health Literacy Behavior and Skills Scale of Preconception Care" section was confirmed through first-order multifactor CFA. The fit indices were found to be at acceptable levels. All items had acceptable t values, factor loadings, 27% lower-upper group comparisons, Cronbach's Alpha (α) reliability coefficients, and test–retest consistency values. For the "Knowledge Scale for Preconception Care" section, the item difficulty index, item discrimination index, and KR-20 reliability coefficient values were also within acceptable ranges. The scale, comprising two sections, was determined to be a valid and reliable instrument for use within the Turkish cultural context. This scale assesses both knowledge and behaviors related to the preconceptional period among individuals of reproductive age (18–49 years), with its limited number of items contributing to ease of use. However, a limitation of the present study is the small number of male participants in the sample. The HLSPC was developed to assess preconception health literacy among individuals of reproductive age. However, the limited representation of male participants in the current study may restrict the generalizability of the findings, particularly to men. Future research should aim to recruit more gender-balanced samples to understand better

how men perceive and engage in preconception health behaviors. Additionally, further validation studies are recommended to examine the psychometric properties of the HLSPC in more diverse populations, including individuals from rural areas, those with varying educational levels, and different socioeconomic backgrounds. Such research would contribute to a more comprehensive understanding of the scale's cultural adaptability. Moreover, longitudinal studies could explore how preconception health literacy, as measured by the HLSPC, evolves and influences actual pregnancy outcomes and health behaviors.

In this study, the content validity of the scale was evaluated based on expert judgment using the methods proposed by Polit and Beck[18]. The I-CVI values ranged from 0.90 to 1.00, indicating that each item was deemed highly relevant by the panel of experts. Additionally, the S-CVI/UA value of 0.82 and the S-CVI/Ave value of 0.98 demonstrate strong overall content validity of the Turkish version of the scale. These findings surpass the recommended thresholds suggested by Almanasreh et al.[25] and Polit and Beck[18] supporting the scale's content validity. Although Kendall's W coefficient of concordance was relatively low (0.20), its statistical significance ($p < 0.001$) indicates a meaningful but limited level of agreement among experts. Based on these results, no modifications were made to the scale items[18,25].

The degree to which a scale fulfills its intended purpose determines its validity, and various methods can be used to assess a scale's validity[26]. Factor analysis may not be suitable for every dataset. The appropriateness of a dataset for factor analysis is evaluated using the KMO coefficient and Bartlett's Test of Sphericity. The KMO coefficient is used to determine whether the sample size in a study is adequate for factor analysis. Unlike Bartlett's test, KMO is a measure rather than a statistical test[25]. A KMO value closer to 1 indicates excellent adequacy, whereas values below 0.50 are unacceptable. Specifically, KMO values in the 0.90s are considered excellent, 0.80 s very good, 0.70 s and 0.60 s mediocre, and 0.50 s poor.[17,27] Bartlett's Test of Sphericity evaluates the suitability of data for factor analysis based on the assumption of normality. A significant test statistic indicates that the data matrix meets the normality assumption required for factor analysis[26,28]. Additionally, a significant chi-square statistic calculated for Bartlett's test is considered evidence of normality in the scores.[29] In this study, the findings (KMO = 0.82; $\chi^2 = 1470.11$; $p < 0.001$) indicate that the dataset meets the criteria for factor analysis.

CFA, a type of Structural Equation Modeling (SEM), is considered a standalone research method and serves as an extension of Exploratory Factor Analysis (EFA), which evaluates the underlying structure of the data[30]. While EFA primarily functions to generate hypotheses by identifying the underlying structure, CFA tests whether the relationships among the identified factors are sufficient, which variables are associated with which factors, whether the factors are independent, and whether the factors adequately explain the model.[31] In scale development studies, validating the measurement model obtained through EFA with CFA is critical for ensuring the construct validity of the scale[32]. For interpreting the model's fit in CFA, the t values of the items, factor loadings, and goodness-of-fit indices are considered[33]. Each item's t value in the model should be above 1.96[34]. According to Harrington[35] factor loadings should not be below 0.30. Factor loadings are interpreted as follows: 0.71 and above: Excellent, 0.63: Very Good, 0.55: Good, 0.45: Fair/Acceptable, 0.32: Weak.[35] In the literature, acceptable values for goodness-of-fit indices obtained through CFA are reported as follows: χ^2 with $p > 0.05$,[34,36] $\chi^2/df < 5$,[36–38] AGFI ≥ 0.85,[25] CFI > 0.90,[36] GFI > 0.90,[36,39] RMSEA < 0.08,[34,36] NFI > 0.90.[40,41]

When the model fit was evaluated through CFA, the obtained fit indices indicated an acceptable level of model adequacy ($\chi^2 = 200.676$, df = 101, $p < 0.001$; GFI = 0.92, CFI = 0.93, AGFI = 0.89, NFI = 0.88, RMSEA = 0.05). Although the Chi-square test was statistically significant suggesting a possible discrepancy between the model and the observed data it is known that this test is highly sensitive to sample size[34,36]. Therefore, the evaluation of model fit relied on multiple indices, which consistently supported the structural validity of the model. These findings confirm that the six-factor structure of the original scale is preserved in the Turkish version and provides a valid and meaningful construct.

The factor loadings of the latent variables in the scale ranged from 0.33 to 0.87, while in the original study, they ranged from 0.49 to 0.96[13]. The t values of all items were above 4.81. When the findings for the lower and upper 27% groups were evaluated, it was observed that participants with low scores could be significantly distinguished from those with high scores in both the sub dimensions and the total scale. The t values, factor loadings, and fit indices of the scale items were found to be good and acceptable. These results indicate that the model adequately explains the desired construct.

Reliability refers to the ability of a test or scale to accurately reflect the conceptual construct it aims to measure, producing consistent results when applied in different settings, at different times, and to different samples from the same population[42,43]. For Likert-type scales, a reliability coefficient above 0.70 is considered acceptable, but it is preferable for the value to be as close to 1 as possible[44,45]. A Cronbach's Alpha coefficient between 0.80 and 1.00 indicates high reliability, 0.60–0.80 indicates moderate reliability, 0.40–0.60 indicates low reliability, and 0.00–0.40 suggests that the scale is not reliable[45]. In this study, the Cronbach's Alpha values for the F3 sub dimension and the total scale were found to be similar to those of the original scale (F1: 0.90; F2: 0.85; F3: 0.82; F4: 0.85; F5: 0.82; F6: 0.82; Total: 0.91) demonstrating high reliability[13]. However, the F1 sub dimension showed low reliability, while the F2, F4, F5, and F6 sub dimensions exhibited moderate reliability. These findings indicate that the scale has acceptable reliability overall, with some variability among its sub dimensions.

Evaluating only individuals' knowledge regarding the preconceptional period is not sufficient. Assessing their knowledge and behaviors during this period offers a more comprehensive understanding of their preconceptional needs. The fact that the HLSPC encompasses six sub dimensions—appropriate medical examination, proper nutrition, coping with stress, healthy weight, living in a safe environment, and vaccinations—enhances its utility. By addressing both knowledge and behavior across these dimensions, the scale allows for a multidimensional assessment of individuals' needs in the preconceptional period[13]. The HLSPC can be a valuable tool in clinical and public health settings. By identifying gaps in knowledge and behaviors related to preconception care, the HLSPC facilitates the design of needs-based educational interventions. It can be used in primary healthcare services and community health centers to screen women and men individually or as couples, guiding tailored

counseling. Moreover, its concise, clear, and easy-to-understand structure allows for its integration into routine health screenings or digital health platforms to increase awareness of preconception care.

The item-item, item-total, and inter-subscale correlation coefficients obtained in the study support the construct validity of the scale. The corrected item-total correlations ranging from 0.23 to 0.60 indicate that the items adequately represent the overall construct. Moreover, the moderate positive correlations between the subscales and the total score suggest that the scale has a coherent and unified structure.[17,44]

The test–retest technique evaluates the consistency of a measurement tool over time. A correlation coefficient of 0.70 or higher is generally considered indicative of good test–retest reliability[23]. In this study, correlation analysis revealed a strong and significant positive correlation between the two measurements. This finding confirms that the measurement tool demonstrates high reliability.

The item difficulty index reflects the degree to which an item in a measurement tool is challenging for respondents. Typically, an item difficulty index value of 0.50 or higher is expected, though this is not always ideal. As determined in this study, having items with varying levels of difficulty within the measurement tool is preferable, as it ensures a balanced assessment and supports the validity of the measurement tool[24]. The item discrimination index reflects the ability of an item in a measurement tool to distinguish between those who answer correctly and those who do not. An index closer to 1 indicates higher discrimination. In this study, 12 items in the scale were identified as acceptable or excellent in terms of discrimination, confirming that the scale is a valid measurement tool[24]. One of the most commonly used methods for determining internal consistency reliability is the KR-20 method. This method estimates the internal consistency of all items with each other and with the entire scale. A KR-20 score of ≥0.60 is considered indicative of a reliable measurement tool. In this study, the KR-20 value of 0.66 confirms that the measurement tool is reliable.[24,46].

Limitations

Several limitations should be considered when interpreting the results of this study. First, data were collected through an online survey, which may have limited participation to individuals with internet access and digital literacy. This could lead to sampling bias, thereby restricting the generalizability of the findings. Second, although the sample size was adequate for factor analysis, the majority of participants were women, with relatively low male participation. This may affect the scale's validity across genders. In future studies, it is recommended that the scale's validity be tested in man, rural area as well as in different cultural settings.

Conclusion

In conclusion, the Turkish version of the HLSPC which includes the 6-factor, 17-item "Health Literacy Behavior and Skills of Preconception Care" and the 13-item "Knowledge Scale for Preconception Care," can be used as a valid and reliable measurement tool to assess preconception health literacy in the Turkish population. The use of this scale will enable healthcare professionals and researchers to assess the current state of health literacy related to preconception care in the Turkish population. It will also contribute to risk assessment and the development of education, care, and intervention programs aimed at fostering behavior change.

Data availability

Data supporting the findings and conclusions are available upon request from the author. All data obtained within the scope of the research will be presented as an information file upon request. If you have any questions, data requests, etc. regarding the research, you can contact the corresponding author.

Received: 28 February 2025; Accepted: 23 June 2025
Published online: 13 October 2025

References

1. Sørensen, K. et al. Consortium health literacy project, E. health literacy and public health: a systematic review and integration of definitions and models. *BMC Public Health*. **12** (1), 80 (2012).
2. World Health Organization. *Health Literacy: the Solid Facts* (WHO Regional Office for Europe, 2013).
3. Ho, T. G., Hosseinzadeh, H., Rahman, B. & Sheikh, M. Health literacy and health-promoting behaviours among australian-singaporean communities living in sydney metropolitan area. *Proc. Singap. Healthc.* **27** (2), 125–131 (2017).
4. Jiregna, B., Amare, M., Dinku, M., Nigatu, D. & Desalegn, D. Women health literacy and associated factors on women and child health care in Ilu Ababor public health facilities, Ethiopia. *Int. J. Women's Health*. **26** (16), 143–152 (2024).
5. Baccolini, V. et al. What is the prevalence of low health literacy in European union member states? A systematic review and meta-analysis. *J. Gen. Int. Med.* **36** (3), 753–761 (2021).
6. Republic of Turkey Ministry of Health. *Turkey Health Statistics Yearbook 2023* (Republic of Turkey Ministry of Health, 2025).
7. Corrarino, J. E. Health literacy and women's health: challenges and opportunities. *J. Midwifery Women's Health*. **58** (3), 257–264 (2013).
8. Rakhshkhorshid, M. & Sarasiyabi, A. S. Investigation of the health literacy level of women in reproductive age as a public health problem in Zahedan. *Int. J. Basic Sci. Med.* **2** (2), 101–105 (2017).
9. Tehrani, H., Rahmani, M. & Jafari, A. Health literacy and its relationship with general health of women referring to health care centers. *J. Health Lit.* **3** (3), 191–198 (2018).
10. Nawabi, F. et al. Health literacy in pregnant women: a systematic review. *Int. J. Environ. Res. Public. Health*. **18** (7), 3847. https://doi.org/10.3390/ijerph18073847 (2021).
11. Kilfoyle, K. A., Vitko, M., O'Conor, R. & Bailey, S. C. Health literacy and women's reproductive health: a systematic review. *J. Women's Health*. **25** (12), 1237–1255 (2016).
12. Gaupšienė, A. et al. Associations between maternal health literacy, neonatal health and breastfeeding outcomes in the early postpartum period. *Eur. J. Midwifery*. **7**, 25. https://doi.org/10.18332/ejm/170161 (2023).
13. Suto, M. et al. Development of a health literacy scale for preconception care: a study of the reproductive age population in Japan. *BMC Public Health*. **21** (1), 2057 (2021).

14. Cairncross, Z. et al. Development and psychometric evaluation of the preconception health knowledge questionnaire. *Am. J. Health Promot.* **35** (2), 172–178 (2020).
15. Republic of Turkey Ministry of Health. *Turkey Ministry of Health Strategic Plan 2024–2028* (Republic of Turkey Ministry of Health, 2025).
16. Newman, A., Bavik, Y. L., Mount, M. & Shao, B. Data collection via online platforms: challenges and recommendations for future research. *J. Appl. Psychol.* **70** (3), 1380–1402 (2021).
17. Tavşancıl, E. *Measurement of attitudes and data analysis with SPSSNobel* (2014).
18. Polit, D. F. & Beck, C. T. The content validity index: are you sure you know what's being reported? Critique and recommendations. *Res. Nurs. Health*. **29** (5), 489–497 (2006).
19. Langowski, C. The times they are a changing: effects of online nursing documentation systems. *Qual. Manag. Healthc.* **14** (2), 121–125 (2005).
20. Borsa, J. C., Damásio, B. F. & Bandeira, D. R. Cross-cultural adaptation and validation of psychological instruments: some considerations. *Paidéia* **22** (53), 423–432 (2012).
21. Coster, W. J. & Mancini, M. C. Recommendations for translation and cross-cultural adaptation of instruments for occupational therapy research and practice. *Rev. Ter. Ocup. Univ. São Paulo*. **26** (1), 50–57 (2015).
22. Jesus, L. M. & Valente, A. R. Cross-cultural adaptation of health assessment instruments. *Univ. Aveiro Port.* **8**, 1–5 (2016).
23. Gökdemir, F. & Yılmaz, T. Likert Tipi ölçekleri kullanma, modifiye etme, Uyarlama ve Geliştirme süreçleri [Processes of using, modifying, adapting and developing likert type scales]. *J. Nursol.* **26** (2), 148–160 (2023).
24. Hasançebi, B., Terzi, Y. & Küçük, Z. Madde Güçlük Indeksi ve madde Ayırt edicilik Indeksine Dayalı çeldirici analizi [Distractor analysis based on item difficulty index and item discrimination index]. *GUJS* **10** (1), 224–240 (2020).
25. Almanasreh, E., Moles, R. & Chen, T. F. Evaluation of methods used for estimating content validity. *Res. Soc. Adm. Pharm.* **15** (2), 214–221 (2019).
26. Kartal, M. & Bardakçi, S. *SPSS ve AMOS uygulamalı örneklerle güvenirlik ve geçerlik analizleri*. [Reliability and validity analyses with SPSS and AMOS applied examples] Akademisyen Kitabevi (2018).
27. Shrestha, N. Factor analysis as a tool for survey analysis. *Am. J. Appl. Math. Stat.* **9** (1), 4–11 (2021).
28. Bartlett, M. S. Tests of significance in factor analysis. *Br. J. Psychol.* **3** (2), 77–85 (1950).
29. Büyüköztürk, Ş. *Sosyal Bilimler Için Veri Analizi El Kitabı* (Pegem Akademi, 2011).
30. Lee, S. Y. *Structural equation modeling. A Bayesian approach* (Wiley, 2007).
31. Özdamar, K. *Tabloların oluşturulması, güvenirlik ve soru analizi* [Creation of tables, reliability and question analysis] Kaan Kitabevi (2004).
32. Worthington, R. L. & Whittaker, T. A. Scale development research: a content analysis and recommendations for best practices. *J. Couns. Psychol.* **34** (6), 806–838 (2006).
33. Çapık, C., Gözüm, S. & Aksayan, S. Kültürlerarası Ölçek Uyarlama aşamaları, Dil ve kültür Uyarlaması: güncellenmiş Rehber [Cross-cultural scale adaptation stages, Language and culture adaptation: updated guide]. *Florence Nightingale J. Nurs.* **26** (3), 199–210 (2018).
34. Schumacker, R. E. & Lomax, R. G. *A Beginner's Guide To Structural Equation Modeling* (Oxfordshire: Taylor and Francis Group, LLC, 2010).
35. Harrington, D. *Confirmatory Factor Analysis* (Oxford University Press, 2009).
36. Munro, B. H. *Statistical Methods for Health Care Research* (Lippincott Williams & Wilkins, 2005).
37. Şimşek, Ö. F. *Yapisal eşitlik modellemesine giriş: Temel ilkeler ve LISREL uygulamalari* [Introduction to structural equation modeling: Basic principles and LISREL applications] Ekinoks,. (2007).
38. Hooper, D., Coughlan, J. & Mullen, M. Structural equation modelling: guidelines for determining model fit. *EJBRM* **6** (1), 53–60 (2008).
39. Lenz, E. R. *Measurement in Nursing and Health Research* (Springer Publishing Company, 2010).
40. Byrne, B. *Structural Equation Modeling with AMOS: Basic Concepts, Applications, and Programming* (Routledge, 2010).
41. Kaplan, D. *Evaluating and Modifying Structural Equation Models* (Sage, 2000).
42. Sürücü, L. & Maslakçi, A. Validity and reliability in quantitative research. *BMIJ* **8** (3), 2694–2726 (2020).
43. Vehkalahti, K. *Reliability of measurement scales tarkkonnen's general method supersedes cronbach's alpha.* Academic Dissertation, University of Helsinki, (2000).
44. DeVellis, R. F. *Scale Development: Theory and Applications* (Sage, 2012).
45. Taber, K. S. The use of cronbach's alpha when developing and reporting research instruments in science education. *Res. Sci. Educ.* **48**, 1273–1296 (2018).
46. Kalaycı, Ş. *Applied Multivariate Statistical Techniques SPSS* (Asil Publishing, 2008).

Acknowledgements

We would like to thank all the women who participated in the study.

Author contributions

Conceptualization: ÖCG, TB, EŞŞ Methodology: ÖCG, TB, EŞŞ, HY Formal analysis and investigation: ÖCG, TB Writing-original draft preparation: ÖCG, TB, EŞŞ, HY Writing-review and editing: ÖCG, TB, EŞŞ, HYSupervision: ÖCG, HY.

Funding

The author(s) reported there was no funding associated with the work featured in this article.

Declarations

Competing interests

The authors declare no competing interests.

Additional information

Correspondence and requests for materials should be addressed to Ö.C.G.

Reprints and permissions information is available at www.nature.com/reprints.

Publisher's note Springer Nature remains neutral with regard to jurisdictional claims in published maps and institutional affiliations.

Open Access This article is licensed under a Creative Commons Attribution-NonCommercial-NoDerivatives 4.0 International License, which permits any non-commercial use, sharing, distribution and reproduction in any medium or format, as long as you give appropriate credit to the original author(s) and the source, provide a link to the Creative Commons licence, and indicate if you modified the licensed material. You do not have permission under this licence to share adapted material derived from this article or parts of it. The images or other third party material in this article are included in the article's Creative Commons licence, unless indicated otherwise in a credit line to the material. If material is not included in the article's Creative Commons licence and your intended use is not permitted by statutory regulation or exceeds the permitted use, you will need to obtain permission directly from the copyright holder. To view a copy of this licence, visit http://creativecommons.org/licenses/by-nc-nd/4.0/.

© The Author(s) 2025