➢ *ORAL PRESENTATION*

Active Control of Air Suspension Systems in Commercial Vehicles

İ. Sina Kuseyri
Marmara University Department of Mechanical Engineering, Maltepe-İstanbul, Turkey

Corresponding author e-mail : sina.kuseyri@marmara.edu.tr

Abstract

Commercial vehicles such as public transportation busses can benefit from the height control of the chassis that an air suspension provides. Main benefits of height control are retaining a pitch angle parallel to the road for passenger comfort regardless of the load and road disturbance, and easy accessibility to vehicle for especially old or disabled people. Electronically controlled air suspension systems are commonly used in commercial vehicles to enhance ride comfort and improve handling stability. This paper focuses on the vehicle height adjustment process in actively controlled air suspension systems. A non-linear mathematical model for adjusting vehicle height is developed by integrating vehicle dynamics, suspension pneumatics, and the thermodynamic effects of compressible flow. A PID controller is proposed for accurate control of vehicle height. Effectiveness and performance of the proposed controller are verified by simulations.

Keywords: Modeling and simulation, air suspension, active control

1 Introduction

The background of ECAS is closely linked to advancements in both air suspension and electronic control technologies, bringing together the best of both worlds to create a highly adaptable and customizable suspension system. Initially adopted in high-end luxury vehicles, ECAS systems have gradually expanded their presence to other automotive segments, including commercial trucks and buses, further emphasizing their effectiveness and versatility in addressing the challenges of diverse driving scenarios. The advantages of ECAS in public transportation buses are notable for their contribution to both passenger comfort and overall vehicle performance. ECAS allows public buses to adjust their ride height based on the number of passengers, cargo load, or road conditions. Customizable ride height contributes to improved accessibility, making boarding and disembarking easier for passengers. The precise control over air pressure in ECAS results in a smoother and more comfortable ride for passengers.

In conventional passive air suspension systems vehicle height is continuously regulated by the direct connection between the air reservoir and air suspensions [1]. To keep the vehicle height constant in rough terrain, high pressure air is continuously supplied to the air springs. In ECAS, on the other hand, control is taken over by an electronic control device (ECU). Hence, air supply to the suspensions can be provided only if the vehicle height exceeds the predefined tolerance [2]. Therefore, actively controlled air suspension systems consume less pressurized air leading to energy savings during the ride.

In [3] the evolution of vehicle pneumatic suspension systems is reviewed. An adaptive LQR controller is designed in [4], and its performance is validated by experiments. Robust controllers for air suspension systems are designed in [5] using finite-time approach and in [6] considering unmodeled dynamics and parametric uncertainties. In [7] and [8] authors design model predictive controllers with a cooperative control method and with multi-mode switching damping respectively. In [9] authors proposed a fuzzy PID controller with nonlinear delay factors to control an ER damper. In [10] authors designed a fuzzy PID controller for damping control of the shock absorber by combining a PID control algorithm with the fuzzy control concept that involves a genetic algorithm-optimized fuzzy PID air suspension control approach.

In this paper we propose a basic PID controller for hight adjustment and road disturbance rejection of ECAS. It is shown that this basic controller is effective with acceptable performance. Modeling of electrical and mechanical parts of the drive system is presented in Section 2. Model based numerical simulation results are in Section 3. Finally we summarize the conclusions of our study in Section 4, and provide suggestions for further research.

2. System Dynamics

The height adjustment function of the ECAS system is achieved by inflating and deflating the air springs. The circuit diagram for this process is shown in Figure 1. It includes four air springs, one at each corner of the vehicle, a solenoid valve that regulates the airflow into the air springs, a compressor that provides compressed air when the gas pressure in the reservoir falls below a certain threshold, a reservoir that stores the compressed air, an air filter that removes impurities from the system, and an air dryer that removes moisture from the intake air to prevent damage caused by excess moisture.

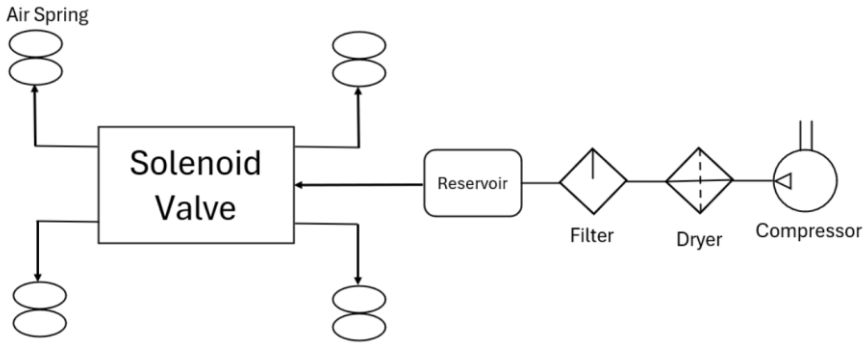

Figure 1: Pneumatics of the ECAS system

The displacement of the sprung mass (vehicle) is adjusted by inflating and deflating the air springs, which modifies the vehicle's height to achieve the desired driving performance.

During inflation, compressed air from the reservoir is directed into the air springs through the pipeline, raising the vehicle's height. In the deflation process, air is released from the air springs into the atmosphere via the pipeline, lowering the vehicle's height.

Based on the described height adjustment processes, a mathematical model for vehicle height adjustment can be derived by integrating vehicle dynamics, the compressible flow equations through the solenoid valve, and the thermodynamic behavior of the air in the air springs. The following assumptions/simplifications are made during this derivation:
i) Air is treated as an ideal gas, and its kinetic energy is considered negligible in all air springs.
ii) The pressure within the air reservoir remains constant, and there is no gas leakage from the system.
iii) The solenoid valve is modeled as a throttle (orifice).
iv) The pressure and temperature of the gas in the air springs are assumed to be uniformly distributed.
v) Rate of change of the volume and the effective area of air springs are constant.

2.1 Thermofluid models for the valve and air springs

As the solenoid valve in the gas circuit is simplified as an orifice, when the solenoid valve is open, area-normalized mass flow rate through the valve is

$$q_m = S_e P_u \phi \tag{1}$$

where the definition of parameter ϕ changes upon the choked and unchoked flow conditions.

$$\phi = \begin{cases} \sqrt{\dfrac{k}{RT}\left(\dfrac{2}{k+1}\right)^{\frac{k+1}{k-1}}} & \dfrac{P_d}{P_u} \le C_r \\ \sqrt{\dfrac{2k}{(k-1)RT}\left[\left(\dfrac{P_d}{P_u}\right)^{\frac{2}{k}} - \left(\dfrac{P_d}{P_u}\right)^{\frac{k+1}{k}}\right]} & \dfrac{P_d}{P_u} > C_r \end{cases} \tag{2}$$

In Equations (1) & (2) q_m is area-normalized mass flow rate, S_e is effective area of the valve, P_u is the upstream pressure, P_d is downstream pressure, R is the gas constant, k is polytropic index, T is the temperature, and C_r is the critical pressure ratio. The upper and lower parts in Equation (2) are for the choked and unchoked flow conditions respectively.

During the elevation of the vehicle, the upstream pressure is the pressure of the air in the reservoir, i.e., $P_u = P_r$, and the downstream pressure is the pressure of the air in the air spring, i.e., $P_d = P_s$. While lowering the vehicle, the upstream pressure is the pressure of the air in the air spring, i.e., $P_u = P_s$, and the downstream pressure is the atmospheric pressure, i.e., $P_d = P_{atm}$.

The variable mass thermodynamic model of air spring is derived to obtain a relationship of air pressure and the area-normalized mass flow rate of the pipeline. The charging and discharging process of the air spring is independent of each other and they are relatively fast, so they can be regarded as adiabatic processes. Assuming ideal gas conditions, the nonlinear dynamic model of the simplified air spring is

$$\dot{P_s} = \frac{kRT}{V} q_m - \frac{kP_s}{V}\dot{V}, \tag{3}$$

where rate of change of the volume of the air spring is

$$\dot{V} = \frac{dV}{dx}\dot{x} = V_x\dot{h}. \tag{4}$$

2.2 Mechanical model of the air suspension

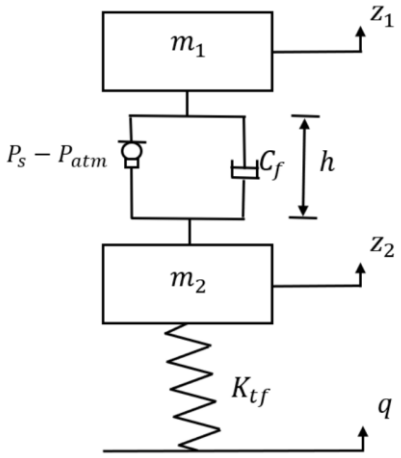

Figure 2: Quarter-vehicle mechanical model of the air suspension

Equations of motion for the quarter-vehicle mechanical model of the suspension system shown in Figure 2 are

$$m_1\ddot{z}_1 = (P_s - P_{atm})A_e + C_f\dot{h} - m_1 g \tag{5a}$$
$$m_2\ddot{z}_2 = K_{tf}(q - z_2) - (P_s - P_{atm})A_e - C_f\dot{h} \tag{5b}$$
$$\dot{h} = \dot{z}_2 - \dot{z}_1 \tag{5c}$$

In this model mass of the quarter-vehicle, m_1, can vary depending on the load on the vehicle.

3 Numerical Simulations and Results

Numerical simulations reflecting the active air suspension system performance during the cruise on a relatively rough road, and during the passage through a bump in this section. We also verify the performance of active control during the ascent and descent of the vehicle. Mathematical model of the air suspension system combined with the PID controller is composed in MATLAB/Simulink.

Rough road condition is modeled by a first order filter that takes white noise as its input [11]

$$q = n - \frac{1}{\omega_c v}\dot{q}, \tag{6}$$

where q is the vertical displacement of the road, n is the white noise signal, ω_c= 0.8 rad/s is the cut-off frequency, v= 7.5 m/s is the vehicle's speed. Bump on the road is modeled by

$$q = 0.15 \sin(9\pi t). \tag{7}$$

Hence bump has a height of 15cm, and a width of 83cm during the cruise with a speed of 7.5 m/s. We take only the half period of the sine signal to represent the bump.

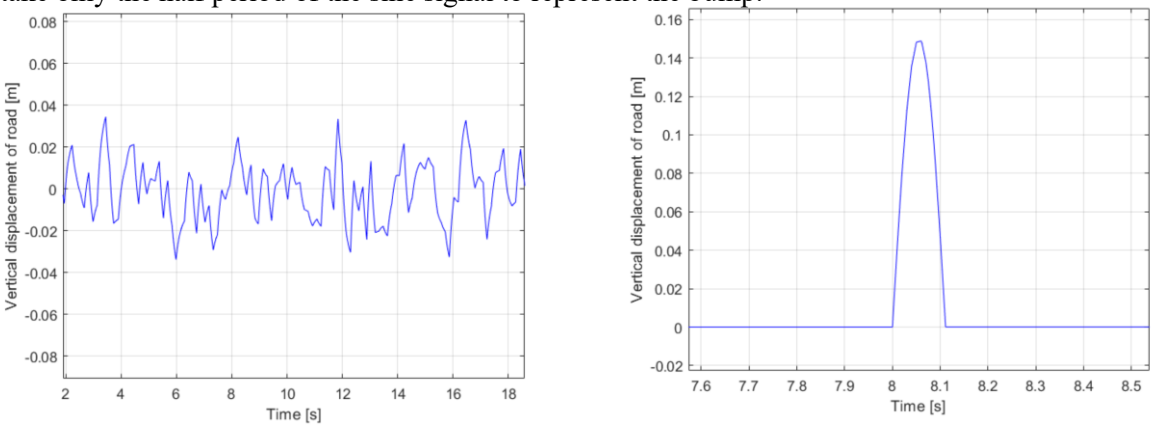

Figure 3: Rough road and bump models

Parameters of the suspension system used in the simulations is given in Table 1 [2]. PID controller gains, optimized by trial and error, are 3,5, 0.06, and 1.5 respectively with the filter coefficient 100.

Table 1: Air suspension parameters

Parameter	Symbol	Value
Sprung mass (kg)	m_1	1550
Unsprung mass (kg)	m_2	200
Nominal bus height (m)	h	0.5
Damping coefficient (kN.s/m)	C_f	8.3
Tire vertical stiffness (kN/m)	K_{tf}	750
Effective air spring area (m^2)	A_e	0.042
Unit change in volume (m^3/m)	dV/dx	0.045
Reservoir pressure (MPa)	P_r	0.8
Effective valve area (m^2)	S_e	$7.34x10^{-6}$
Polytropic index	k	1.38
Critical pressure ratio (kg)	C_r	0.528
Temperatue (K)	T	300

Response of the active air suspension system to a bump and to rough road disturbance is shown in Figure 4. When the vehicle passes over an 15 cm height bump, its height rises 5 cm during the transient response. Hence ECAS system bump suppression performance is 67%. Bus reaches the steady-state in 3 seconds.

The road disturbance model is a pseudorandom signal taking values in the range of $\pm$ 0.03 m The ECAS system is so adjusted that it does not take any action if the disturbance is within $\pm$ 0.02 m margin. If the road disturbance exceeds this margin controller activates air valves and bus height is adjusted. This mode is the main benefit of the active air suspension over the passive air suspension systems in disturbance rejection. Frequent switching of the air valve can cause premature wear of the components. Moreover, high energy consumption of the vehicle to generate compressed air is mitigated.

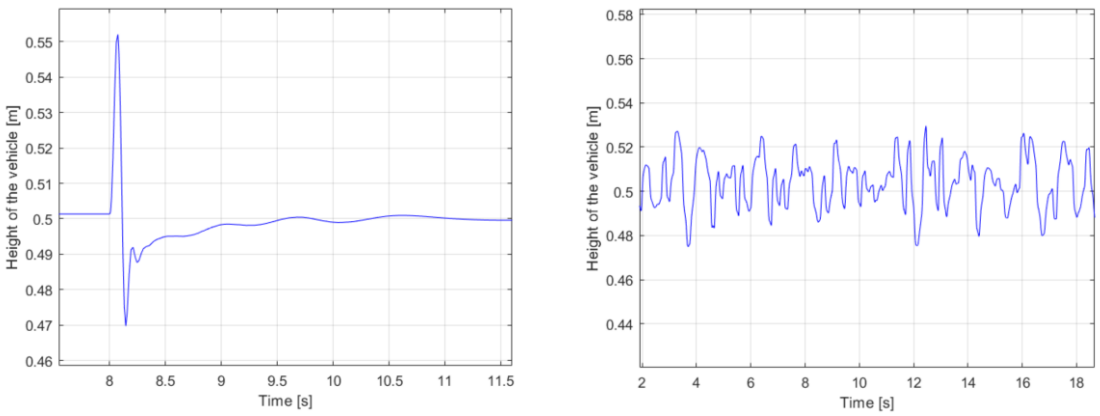

Figure 4: Bump and rough road responses

The ECAS system also enables the driver to adjust the height of the bus. In Figure 5 height adjustment processes are simulated.

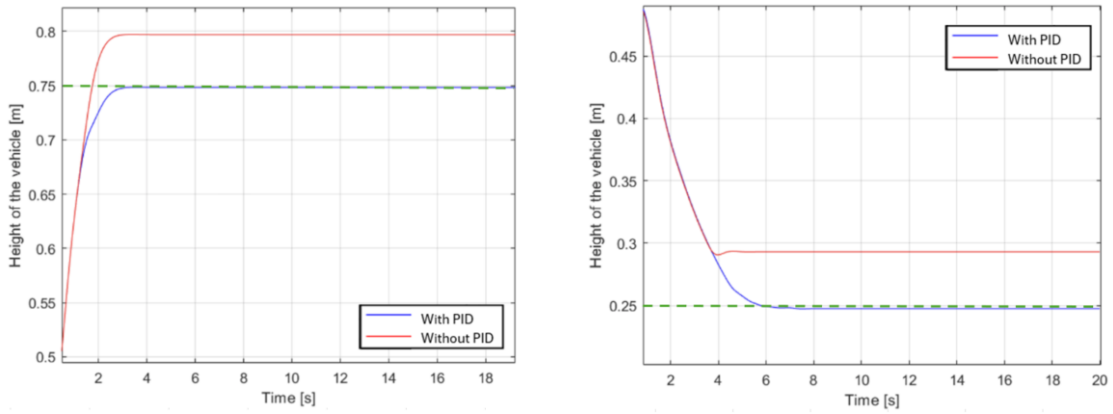

Figure 5: Height adjustment processes

Dashed green line is the target height in the simulations which is 0.75 m during the ascent of the vehicle body, and 0.25 m during the descent. Without feedback control system height is elevated to 0.8 m during descent which is 5 cm above the reference command. Feedback PID control achieves almost zero steady-state error. Similarly, during the descent of the vehicle feedback PID control achieves zero steady-state error as opposed to 4 cm error in the case without feedback. Moreover, it is clear from the figures that settling time during the vehicle ascent process (3 seconds) is approximately half of the settling time of vehicle descent process (6 seconds) hence, ascending the bus is faster than descending it. The difference stems from the fact that, during the ascent process, upstream pressure is reservoir pressure which is 0.8 MPa, whereas during the descent upstream pressure is the internal pressure of the air spring which is around 0.58 MPa.

4 Conclusion and Recommendations for Future Work

In this paper we have studied electronically controlled air suspension systems which represent a significant advancement in the field of public transportation, offering enhanced ride quality, improved safety, and enabling height adjustment. The implementation of ECAS in public buses addresses the critical need for adaptive suspension solutions that can respond dynamically to varying load conditions and road surfaces, thereby optimizing passenger comfort and vehicle stability and passengers' accessibility by height adjustment. The ECAS system used with the system specified in our work had a suppression performance for the bump on the road up to 67%. We have shown that Feedback PID control leads to zero steady state error during the height adjustment processes. Moreover, it is possible to deactivate the air valves if the road disturbance is less than a margin that can easily be tolerated by the passengers. Frequent switching of the air valve can cause premature wear of the mechanical components. Moreover, high energy consumption of the vehicle to generate compressed air can be mitigated. We recommend further studies to be made on the quantification of possible energy savings of active air suspension systems over their passive counterparts.

References

[1] Huang T., Chen G., Zong C., Zhou T., 2015, "Research on Vehicle Height Adjustment Control of Electronically Controlled Air Suspension", SAE Technical Paper, 2015-01-2750, doi:10.4271/2015-01-2750.

[2] Dou H., Chen L., Wang S., 2014, "Research on vehicle height adjustment control of electronically controlled closed loop air suspension", Journal of Mechanical Design and Manufacture, vol. 9, pp. 171-174.

[3] Atindana V.A., Xu X., Nyedeb A.N., Quaisie J.K., Nkrumah J.K., and Assam S.P., 2023 "The Evolution of Vehicle Pneumatic Vibration Isolation: A Systematic Review", Shock and Vibration, vol.2023, pp.1-23.

[4] Gokul P.S., Malar M.K., 2019, "A contemporary adaptive air suspension using LQR control for passenger vehicles", IPA Transactions, vol. 93, pp. 244-254.

[5] Yin C., Zhao D., Zhang J., Wang S., Xu X., Sun X., and Shi D., 2020, "Body height robust control of automotive air suspension system using finite-time approach", Asian Journal of Control, vol. 2021, pp. 1-13.

[6] Sun X., Yuan C., Wong P.K., Cabecinhas D., and Silvestre C., 2019, "Robust Ride Height Control for Active Air Suspension Systems With Multiple Unmodeled Dynamics and Parametric Uncertainties", IEEE Access, vol. 7, pp. 59185-59199.

[7] Geng G., Zeng S., Sun L., Li Z., and Yu W., 2022, "Cooperative Control of Inter-connected Air Suspension Based on Energy Consumption Optimization", Shock and Vibration, vol. 2022, pp. 1-13.

[8] Sun X., Yuan C., Cai Y., Wang S., and Chen L., 2017, "Model predictive control of an air suspension system with damping multi-mode switching damper based on hybrid model", Mechanical Systems and Signal Processing, vol. 94, pp. 94-110.

[9] Zhang P., Chen W., Wang H., Wang J., Lu H., and Cheng Z., 2022, "Fuzzy PID control method for damping of electronically controlled air suspension shock absorbers for vehicles", Eng. Res. Express, Vol. 4, 045020.

[10] Zhang S., Li M., Li J., Xu J., Wang Z., and Liu S., 2024, "Research on Ride Comfort Control of Air Suspension Based on Genetic Algorithm Optimized Fuzzy PID", Applied Sciences, vol. 14, no. 17, 7787.

[11] Liu H., Gao H., and Li P., 2013, "Handbook of Vehicle Suspension Control Systems", Institution of Engineering and Technology.