EXPERIMENTAL ANALYSIS OF ATB VALUE IN RUBBER-TYRED TRACTORS

Mustafa DEMİR
Öğrenci, Marmara Üniversitesi, Fen Bilimleri Enstitüsü, Makine Mühendisliği Anabilim Dalı
PHD Student, Marmara University, Faculty of Technology, Department of Mechanical Engineering
ORCID NO: 0009-0001-2830-7894

Selim HARTOMACIOĞLU
Doç. Dr., Marmara Üniversitesi, Teknoloji Fakültesi, Makine Mühendisliği Bölümü
Assoc. Prof. Dr., Marmara University, Faculty of Technology, Department of Mechanical Engineering
ORCID NO: 0000-0002-4541-4894

Murat ŞEN
Dr. Öğr. Üyesi, Marmara Üniversitesi, Teknoloji Fakültesi, Makine Mühendisliği Bölümü
Asist. Prof. Dr., Marmara University, Faculty of Technology, Department of Mechanical Engineering
ORCID NO: 0000-0003-2216-245X

ABSTRACT
The implementation of Euro V emission standards in agricultural mechanization, driven by increasingly stringent environmental regulations, has led to significantly higher thermal loads in tractor engines. Under these demanding conditions, optimization of the cooling system becomes a critical engineering requirement in order to extend component life, maintain effective lubrication, and prevent performance degradation. In this study, the cooling performance of a modern wheeled tractor was analyzed in detail using the Air to Boil (ATB) parameter, which represents the boiling margin of the cooling system.
Due to the inherently low operating speeds of tractors, a test procedure in which natural air flow (ram air) was neglected was established based on the SAE J819 standard. To simulate the most thermally severe operating conditions, measurements were conducted at maximum torque speed, under full engine load, and with the air-conditioning system activated, introducing additional airflow resistance. The thermal effects of design modifications, including a 20 mm increase in radiator core width and a 40 mm increase in fan diameter, were investigated.
Experimental results indicated that the increased fan diameter enhanced airflow rate, resulting in a notable 4°C improvement in the ATB value, while the operation of the air-conditioning system reduced cooling performance by approximately 2°C. Furthermore, non-uniform temperature distribution across the intercooler was observed, and it was determined that geometric improvements do not always lead to linear performance gains. As a result of the implemented design revisions, a total ATB improvement of 15% was achieved, raising the system above the target safe operating threshold of 49°C and validating its suitability for operation under severe climatic conditions.
Keywords: Tractor Cooling System, ATB, Experimental Analysis

LASTİK TEKERLEKLİ TRAKTÖRLERDE ATB DEĞERİNİN DENEYSEL ANALİZİ

ÖZET

Tarımsal mekanizasyonda çevresel standartların yükselmesiyle devreye alınan Euro V emisyon normları, traktör motorlarında daha yoğun ısıl yüklerin oluşmasına neden olmuştur. Motor bileşenlerinin ömrünü uzatmak, yağlama etkinliğini korumak ve performans kayıplarını önlemek adına soğutma sisteminin bu zorlu koşullara göre optimize edilmesi kritik bir mühendislik gerekliliğidir. Bu çalışmada, modern bir lastik tekerlekli traktörün soğutma performansı, sistemin kaynama sınırını ifade eden ATB (Air to Boil) parametresi üzerinden detaylı olarak analiz edilmiştir.

Traktörlerin çalışma doğası gereği düşük hızlarda seyretmesi nedeniyle doğal hava akışının (ram air) ihmal edildiği test prosedürü, SAE J819 standardı referans alınarak kurgulanmıştır. Soğutma sistemini termal açıdan en çok zorlayan senaryoyu simüle etmek amacıyla ölçümler; maksimum tork devrinde, motor tam yük altındayken ve hava akışına ek direnç oluşturan klima sistemi aktifken gerçekleştirilmiştir. Çalışmada radyatör petek genişliğinin 20 mm artırılması ve fan çapının 40 mm büyütülmesi gibi tasarım değişikliklerinin termal etkileri irdelenmiştir.

Elde edilen deneysel veriler, fan çapındaki büyümenin hava debisini artırarak ATB değerinde 4°C'lik belirgin bir iyileşme sağladığını, buna karşın klima ünitesinin performansı yaklaşık 2°C düşürdüğünü göstermiştir. Ayrıca intercooler üzerindeki sıcaklık dağılımının homojen olmadığı ve geometrik iyileştirmelerin her zaman lineer performans artışı sağlamadığı tespit edilmiştir. Sonuç olarak, uygulanan revizyonlarla ATB değerinde toplam %15'lik bir artış başarılmış ve sistem, güvenli çalışma eşiği olan 49°C hedefinin üzerine taşınarak zorlu iklim koşulları için doğrulanmıştır.

Anahtar kelimeler: Traktör Soğutma Sistemi, ATB, Deneysel Hesaplama

INTRODUCTION

Every energy-generating system is designed to operate within a specific temperature range for efficient and reliable performance. Maintaining the temperature within these limits during long-term operating conditions increases the durability of system components and reduces performance losses. In internal combustion engines, cooling systems are utilized to ensure the engine operates stably and effectively. To ensure the smooth and effective operation of engine components, lubrication conditions and operating tolerances must be maintained within design limits. The sustainability of these conditions is directly dependent on keeping the temperature levels of mechanical parts within certain ranges. Failure to provide temperature control results in operating clearances deviating from designed values due to expansion and contraction effects in materials; this leads to deterioration of lubrication performance, reduced engine efficiency, and ultimately an increased risk of mechanical damage (Karabulut et al. 2023). The effective control of heat transfer within the engine has a direct impact on fundamental operating parameters such as engine power, lubrication efficiency, fuel consumption, and exhaust emissions.

According to the Law No. 2918 on Highway Traffic, a rubber-tyred tractor is defined as: "Agricultural vehicles that can tow trailers and semi-trailers under certain conditions but are not used for commercial transport purposes" (Official Gazette of Turkey, No. 18195, 1983). Within the scope of regulations aimed at reducing environmental impacts in agricultural machinery, it has become mandatory for tractor engines to meet Euro V emission standards. This requirement necessitates the more effective removal of waste energy generated in engines. Although research and development activities for electric tractors have accelerated in recent years, these vehicles have not yet reached a widespread usage level comparable to electric cars in the automotive sector. Therefore, tractors with diesel-fueled internal combustion engines continue to be predominantly preferred in agricultural applications today.

The cooling system in tractor engines exhibits a structure consisting primarily of a radiator and charge air cooler (CAC) that provide heat exchange, an oil cooler, a fuel cooler used in certain engine power ranges, and an optional air conditioning unit. Additionally, the circulation pump that ensures coolant circulation, the thermostat that performs temperature control, water jackets within the engine block, connection and transmission pipes, the fan and shroud that regulate air flow, and sensors that continuously transmit data to the electronic control unit are among the fundamental components of the cooling system (Kaleli et al. 2017; Karabulut et al. 2023). In traditional system architecture, coolant circulation is provided via a mechanical pump driven by the crankshaft, temperature control is carried out with a wax-type thermostat valve, and the radiator fan is operated mechanically or with a viscous clutch. In modern automotive engine cooling control approaches, mechanical pump and fan systems are being replaced by electrically driven alternatives. This shortens the time for the engine to reach its nominal operating temperature, particularly under cold start conditions. Thus, combustion inefficiencies are reduced, engine efficiency is increased, and the rise of pollutant emissions is prevented. (Kaleli et al. 2017). It is important that the cooling system is designed to accommodate all versions and variants of a vehicle; this approach eliminates the need to develop a separate cooling package for each application and standardizes system design. (Rosa et al. 2009). Increasing the performance of the cooling system does not always require enlarging the physical dimensions of the components. Today, increasing demands for interior volume cause more limited packaging spaces in the engine compartment, restricting geometric expansion in most applications. Under such constraints, improvements in system performance can be achieved by focusing on reducing structural inefficiencies. Methods such as directing air flow more regularly and homogeneously, optimizing the radiator surface in terms of fin density, improving fan design with blade geometry and number, preventing the recirculation of hot air returning from the engine body and exhaust components, and optimizing the arrangement of components and the distance between them allow for an increase in cooling capacity without the need for additional volume (Karabulut et al. 2023; Pang et al., 2011). The fundamental function of the radiator is to transfer the heat absorbed by the cooling water from the engine to the air passing through via the fan through its channels, thereby ensuring the cooled liquid returns to the engine cooling system (Alkan, 2010). Increasing radiator thickness is not considered a cost-effective method for increasing heat rejection capacity. Assuming the air flow rate remains constant, doubling the radiator thickness provides an increase in heat rejection of approximately 1.5 times. Furthermore, in practical applications, an increase in radiator thickness leads to a decrease in air flow, further reducing the expected improvement in heat rejection. Therefore, there is a non-linear relationship with diminishing returns between the increase in radiator core volume and the heat rejection gain obtained (Beatenbough, 1967). Except for limited applications with very thin core structures, the heat rejection performance of radiators can be improved in most cases with increased air flow. The need for higher fan power to increase air flow rate creates significant design constraints, such as increased noise levels and the negative reflection of additional energy requirements on fuel consumption. Enlarging the fan diameter or blade geometry to use the heat transfer surface allowed by the radiator more effectively increases aerodynamic drag and drive power requirements, causing an increase in fuel consumption. However, increased fan speed and blade tip speeds also increase noise emissions, creating the risk of exceeding applicable noise limits in most applications. Therefore, the most appropriate engineering solution is to determine a fan and radiator design that remains within legal noise limits while balancing the additional cooling performance provided with an acceptable level of increase in fuel consumption. In some applications, accepting a certain level of loss in radiator performance is evaluated as a more appropriate approach than solutions aimed at increasing air flow.

When this situation is evaluated, the most economical radiator always has the largest applicable frontal area, the thinnest core, and the narrowest applicable fin spacing (Beatenbough, 1967).
There are two main energy sources contributing to the cooling air flow passing under the engine hood; one is ram air, and the other is the radiator fan. For vehicles at high speeds, the main driving force of cooling air flow is ram air. For vehicles at low speeds, the main driving force is the radiator fan. Wind conditions, especially headwinds, contribute directly to ram air pressure and increase ATB by lowering the coolant temperature (Pang et al. 2012; Williams, 1985). In high-speed conditions, a shroud placed behind the radiator may partially block the natural air flow created by the ram air effect, reducing the amount of air passing through the radiator. This causes a decrease in cooling performance at high speeds. Conversely, at low speeds or stationary operation, the shroud directs the air flow more effectively to the radiator surface, increasing the fan's cooling efficiency. Therefore, while shroud usage improves low-speed cooling, it generally negatively affects high-speed cooling (Beatenbough, 1967).
The characteristic operation of tractors at low forward speeds largely eliminates the opportunity to benefit from natural air flow (ram air). For this reason, ATB cooling tests are carried out under stationary conditions, neglecting the ram air effect. Under these operating conditions, shroud structures become a critical component for the effectiveness of the tractor cooling system. The basic approach to increasing cooling performance in the absence of ram air contribution is to provide the widest possible air inlet area and to use grille geometries optimized to minimize flow resistance (Beatenbough, 1967). In line with these design requirements, many tractor manufacturers leave areas outside the main hood boundaries (which provide structural strength) and lighting/signaling elements completely open to allow air passage. Consequently, compared to automobiles of the same power density, heavy equipment like tractors requires larger cooling components.
This article will examine the calculation of ATB (air to boil) for a rubber-tyred tractor, the measurement of radiator and intercooler inlet/outlet temperatures, the effect of air conditioning on ATB, and the effect of modifications made to improve cooling performance on ATB.

METHOD

The ambient temperature value at which the coolant reaches its boiling limit under a vehicle's actual operating conditions is defined as the ATB temperature. This parameter is not a directly measurable quantity but can be determined by evaluating temperature data obtained during tests performed on the vehicle. The ATB method is directly related to the boiling point of the coolant and provides immediate information on how close the cooling system is to boiling. Increasing the boiling point of the coolant will automatically increase the ambient temperature at which it can operate. Target values for ATB temperature are defined by design engineers taking into account the vehicle's projected usage geography and climatic conditions. While higher ATB limits are determined for vehicles planned to be operated in high ambient temperatures, lower ATB temperature targets are based on vehicles to be used in cold climate regions.

ATB Calculation Methodology

The coolant temperature at the top tank or engine outlet must be subtracted from the theoretical coolant boiling temperature, corrected for pressure effects. The resulting difference is added to the actual ambient temperature measured during the test to calculate the relevant evaluation parameter (SAE International, 2009).
ATB = (Refrigerant Boiling Temperature − Engine Coolant Outlet Temperature + Ambient Temperature) (i)
At low engine speeds, the amount of heat released as a result of the combustion process is limited. This creates an operating condition that could theoretically allow for high ATB temperatures.

However, in the same speed range, the low fan speed and coolant flow rate restrict the system's heat removal capacity and reduce cooling effectiveness. At high engine speeds, since the power demanded by the engine increases, the amount of heat produced rises; conversely, fan speed and coolant flow rate also increase depending on the engine speed. This significantly improves cooling capacity. Due to these opposing changes in heat generation and cooling capacity depending on engine speed, ATB temperature evaluations should be carried out at different engine speeds. Among the obtained results, the engine speed where the lowest ATB temperature occurs should be accepted as the critical operating point for the cooling system (Alkan, 2010). Two main operating speeds stand out in terms of the cooling system in tractor engines: the maximum power and maximum torque points. In ATB evaluations made between these speeds, it is observed that the lower ATB temperature occurs at maximum torque speed, under full load, with the air conditioning on. This indicates that this speed range represents heavier and more challenging operating conditions for the cooling system.

Test Conditions and Equipment

This section details the tractor's test conditions and the location and layout of the instrumentation. The specifications of the tractor subjected to the test are shown in Table 1.

Table 1. Tractor General Specifications

ENGINE		**TRANSMISSION**	
Emission Level	Stage V	**Gearbox Type (4 Gears, 3 Ranges)**	Mechanical
Emission System	DOC + DPF + SCR	**Gear Option**	24 Forward - 24 Reverse
Nomimal Power (HP)	125	**Hi - Low**	Electro-Hydraulic
Nomimal Power RPM	2200		
Aspiration	Turbo Intercooler	**Fwd-Rev Shuttle Lever**	Mechanical - Under Steering
Number of Cylinders	4		
Displacement (liters)	3,9	**4WD Control**	Electro-Hydraulic
Maximum Torque (Nm)	500		
Max Torque Speed (d/dak)	1500	**Front Diff. Lock**	Electro-Hydraulic
Air Filter Type	Dry		
Fuel Tank Capacity (L)	170	**Rear Diff. Lock**	Electro-Hydraulic
Battery Circuit Breaker	Standard		

Tests must be conducted under conditions requiring special attention to the following points:

- The thermostat must be blocked (fixed open) to ensure maximum water flow velocity from the radiator. (Rosa et al. 2009).
- The fan's viscous clutch must be locked to ensure maximum air flow velocity. (Rosa et al. 2009).
- The liquid coolant mixture should be as specified in the manufacturer's catalog; adjusted to be 50% antifreeze + 50% water under 1 bar cap pressure .
- To ensure the engine provides maximum load in the determined speed range; a heavier and more powerful vehicle than the tested vehicle should be attached behind to act as a brake, or a PTO dynamometer for tractors should be used.

- Environmental conditions must be favorable; on flat terrain without slope, temperature above 24°C, wind below 10 km/h, precipitation-free (no rain) weather, and high relative humidity should be avoided (SAE International, 2009).
- All engine maintenance must be performed. All items directly related to the cooling system must be checked for proper adjustment, the radiator core must be clean internally and externally, and fins must be straight and in good condition.
- If the temperature change difference remains below 1°C in each monitored 10-minute cycle, the system can be considered to have reached a stable state. Once this condition is met, the ATB value can be calculated.

A Dewesoft Krypton thermocouple module allowing for 16-channel temperature measurement was used in the tests. The measurement points for each of the outputs in the data acquisition device are shown below in Table 2. In addition to the external ambient and radiator inlet temperatures required to determine the ATB temperature, temperatures such as under-hood, intercooler, and radiator front will also be measured (Figure 1). Furthermore, the program interface where data is viewed and recorded is provided (Figure 2).

Table 2. Dewesoft Channel Layout

Channel No	Description	Channel No	Description
1	Radiator Coolant Inlet Temp	7	Radiator Front Temperatures
2	Radiator Coolant Outlet Temp	8,9,10,	External Ambient Temp Probes
3	Intercooler Air Inlet Temp	11,12	Fuel Inlet/Outlet
4	Intercooler Air Outlet Temp	13	Brake Oil Tank
5	Air Intake Inlet Temp	14,15	Transmission Oil Cooler Inlet/Outlet
6	Sump Oil Temp	16	Front of Hood

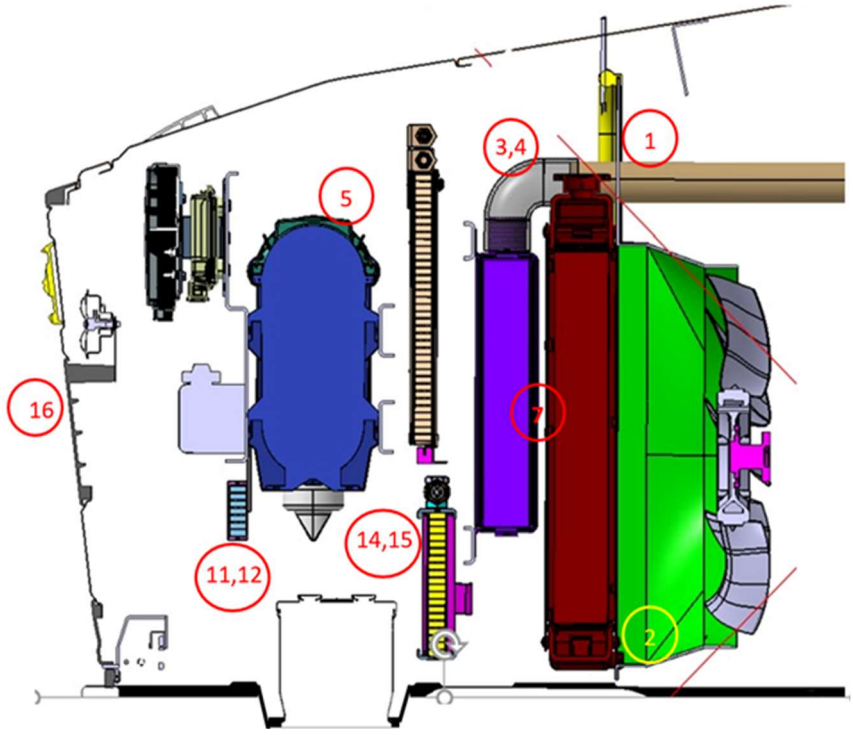

Figure 1. Thermocouple placement from tractor hood cross-section



Figure 2. Data acquisition and recording interface

RESULT AND DISCUSSION

Within the scope of ATB tests carried out to verify the cooling system design, the parameters of maximum torque speed, maximum power speed, and maximum engine speed under full load conditions were evaluated comparatively. When the obtained results were examined, it was determined that as the engine speed increased, the coolant flow rate and fan speed increased simultaneously; consequently, the ATB value showed an increasing trend. In this context, when compared with other operating conditions, it was evaluated that the maximum torque speed at full load represents the most challenging operating condition for the cooling system (Figure 3). It was decided to address this as the reference case in subsequent analyses.

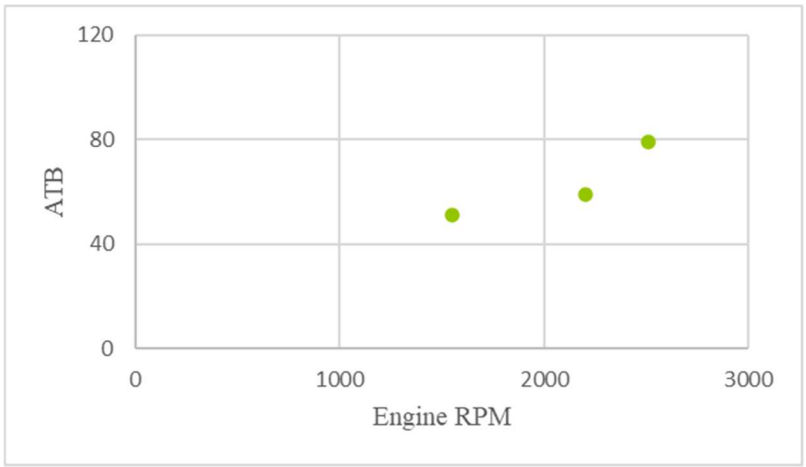

Figure 3. Suitable speed scanning test for the worst-case scenario

An ATB comparison is presented for cases where the optional air conditioning unit on tractors is engaged versus disengaged (Figure 4). During the relevant measurements, the air conditioning module was set to operate at maximum cooling capacity. When the graph results were examined, it was determined that under conditions where the ambient temperature was 30°C, the air conditioning condenser created an additional resistance to the system air flow, causing an increase (deterioration) of approximately 2°C in the ATB value.

In tractor and off-road vehicle applications, it is considered normal for the air conditioning condenser to create an impact of approximately 2–4°C on ATB. This situation indicates that auxiliary cooling comfort systems have a distinct effect on the main cooling performance. Therefore, in tractors operating under high thermal loads and showing a tendency to overheat, it is evaluated that temporarily disabling comfort components that create additional resistance to air flow, such as air conditioning, can be an effective measure to protect the engine. It was concluded that following such temporary measures, dirt and blockages accumulating on radiator surfaces must be cleared for the sustainability of system performance.

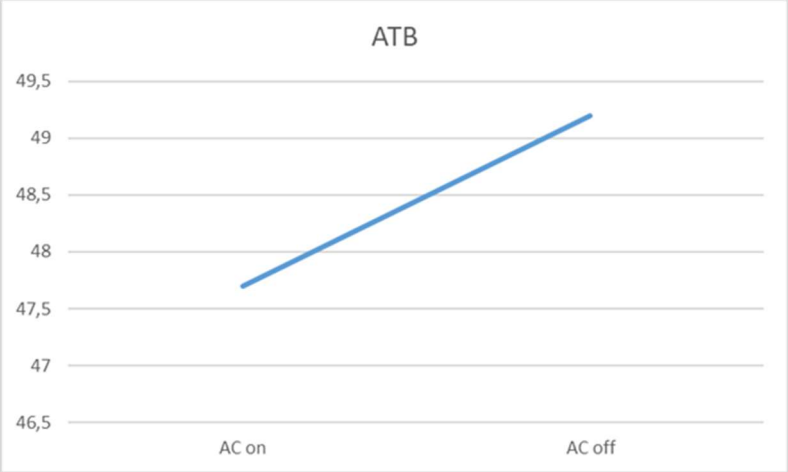

Figure 4. The effect of Air Conditioning on ATB

The radiator core thickness was increased by 20 mm, and the effect of this geometric change on the ATB value is indicated (Figure 5). When the graph results were examined, it was determined that the proportional increase realized in core thickness was approximately twice the magnitude of the proportional change observed in the ATB value. This finding reveals that the effect of improving thickness in radiator geometry on ATB remains limited and that system performance does not scale linearly with core thickness. In this context, it was concluded that in future studies, the fan placement within the shroud as well as the distance between the fan and radiator should be evaluated in detail regarding their effects on heat transfer and air flow characteristics.

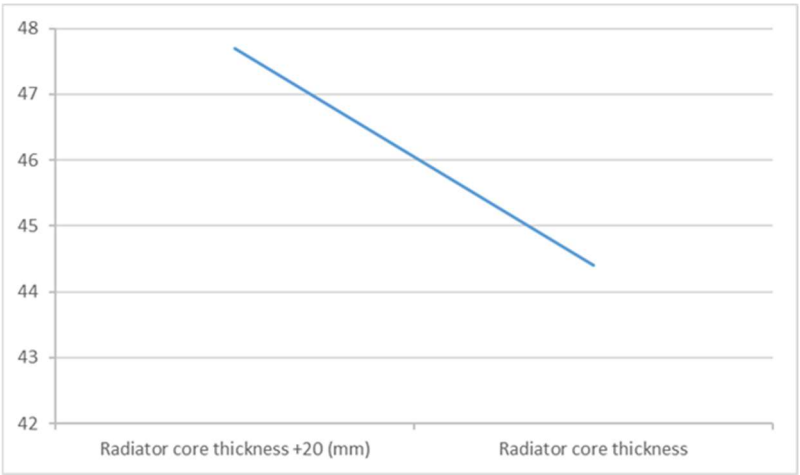

Figure 5. Effect of Core Thickness

To increase the effectiveness of air flow on the tractor, the fan diameter was increased by +40 mm, and the effect of this change on the ATB value is presented (Figure 6).

When the graph was evaluated, it was determined that the air flow rate increased depending on the increase in fan diameter, and this increase provided a positive contribution of approximately 4°C to the ATB value. The results obtained show that increased air flow rate has a direct and positive effect on heat transfer performance.

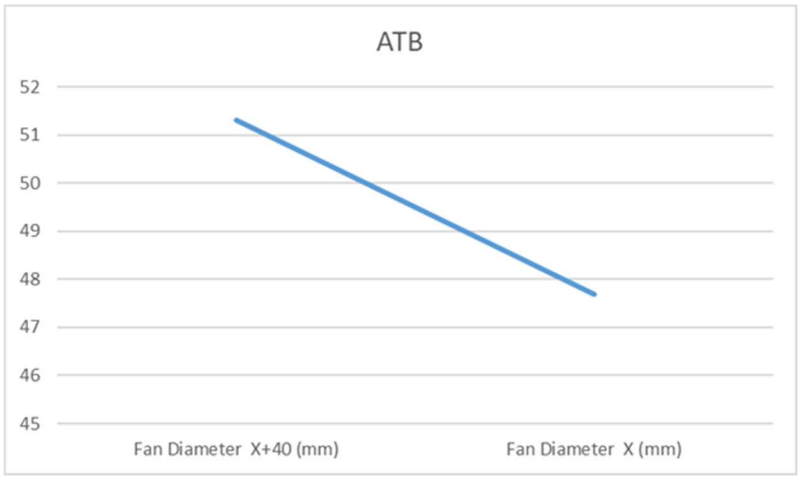

Figure 6. Effect of Fan Diameter on ATB

During the change in fan diameter, the differences between radiator and intercooler inlet and outlet temperatures were examined, and the results obtained were shared comparatively (Figure 7). When the graph was evaluated, while it was observed that the increase in fan diameter caused an increase in the ATB value, it was determined that the temperature change on the intercooler remained parallel to the fluctuations in ambient temperature. This situation indicates that the air flow passing over the intercooler is not homogeneous; there are aerodynamic resistances restricting air flow, or there are significant leaks and losses in the system. To improve air flow and ensure a more homogeneous distribution along the intercooler surface, it is evaluated that design improvements such as rearranging the distances between components positioned before the intercooler and directing air flow towards the intercooler can be implemented.

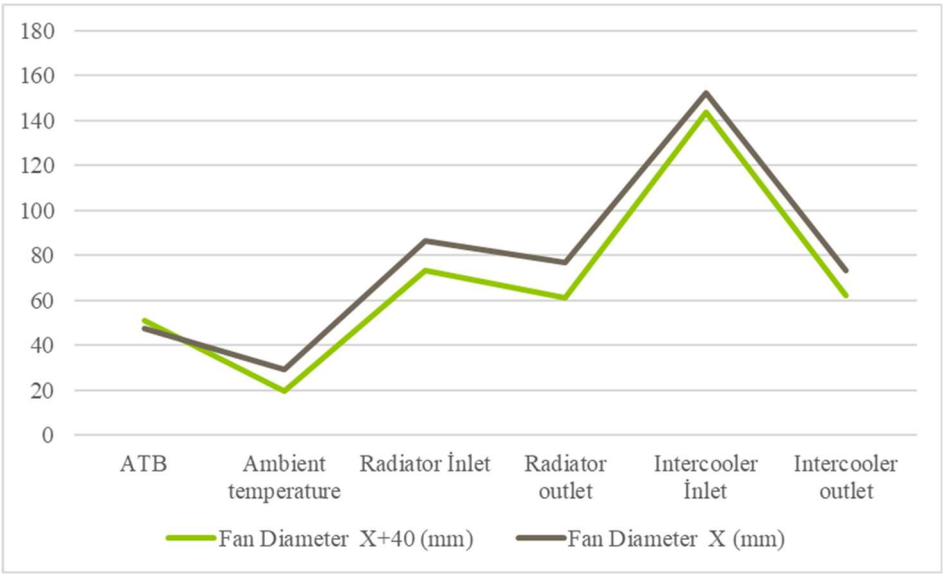

Figure 7. Variation of radiator and intercooler inlet-outlet temperatures

CONCLUSION

In this study, the ATB performance of a rubber-tyred tractor was analyzed due to the increasing thermal loads on engines caused by updates in emission legislation. It was determined that the ATB measurement is required to be performed at the maximum torque speed, which is the tractor's most critical operating condition, under full load, and with the air conditioning system engaged. As a result of the improvement steps applied, gradual and positive developments were obtained in the ATB parameter. The targeted performance level was reached with the current revisions made. Following the achievement of the target value, the shroud configuration, grille effective flow area, placement distances between components, and evacuation constraints of hot air accumulating in the engine compartment—factors thought to contribute to increasing cooling capacity—were analyzed. It was concluded that when these factors are taken into account, the ATB value has the potential for additional increase.

In conclusion, thanks to the improvements carried out on the cooling system, a total change of approximately 15% was achieved in the ATB value, and the commercially acceptable threshold of 49°C was exceeded even under operating conditions with the air conditioning on.

ACKNOWLEDGEMENTS

In this study, I would primarily like to thank the Senior Management of Tümosan Engine and Tractor company for their support, Tümosan Technology and Engineering Director Mr. Volkan Gün, Defense and Industrial Vehicles Assistant Manager Mr. Orkan Buran, and Vehicle Test Engineer Mr. Engin Köse for their support in the execution of this test.

REFERENCES

Alkan, O. (2010). Experimental analysis of heavy commercial vehicle cooling performances (Master's thesis). Eskişehir Osmangazi University, Institute of Pure and Applied Sciences, Mechanical Engineering Department..

Beatenbough, P. K.* (1967). Engine cooling systems for motor trucks (SAE Technical Paper 670033). SAE International.

Kaleli, A., Kaltakkıran, G., Dumlu, A., & Ayten, K. K. (2017). Design and control of intelligent cooling system for IC engine. In 2017 International Conference on Engineering Technologies (ICET) (pp. 1–6). IEEE.

Karabulut, H., Menküç, R., Özdemir, A. O., & Yıldırım, E. (2023). Development and application of a mathematical model for the design of radiators used in internal combustion engines. Eskişehir Osmangazi University Journal of Engineering and Architecture, 31(2), 644-662.

Pang, S. C., Kalam, M. A., Masjuki, H. H. ve Hazrat, M. A.* (2012). A review on air flow and coolant flow circuit in vehicles' cooling system. International Journal of Heat and Mass Transfer, 55, 6295–6306.

Pang, S. C., Hazrat, M. A., Masjuki, H. H. ve Kalam, M. A.* (2011). Integration of 1D and 3D simulations of engine cooling system: After keyed-off. 2011 10th International Symposium on Distributed Computing and Applications to Business, Engineering and Science içinde (s. 46–50).IEEE.[https://doi.org/10.1109/DCABES.2011.53](https://www.google.com/search?q=https://doi.org/10.1109/DCABES.2011.53)

Republic of Turkey. (1983). Highway Traffic Law No. 2918. Official Gazette, 18195.

Rosa, G. S., Lusa, D., Altafini, C. R. ve Wander, P. R.* (2009, Kasım). Dimensioning procedure of coolant radiators for trucks and buses. 20th International Congress of Mechanical Engineering (COBEM 2009), Gramado, RS, Brezilya.

SAE International.* (2009). Engine cooling system field test (Air-to-boil) (SAE Standard J819). SAE International.

Williams, J.* (1985). An automotive front-end design approach for improved aerodynamics and cooling (SAE Technical Paper 850281). SAE International.