A PROPOSITION OF EMPLOYING AN AIR HEATED - HEAT STORAGE SOLAR COLLECTOR IN THE FACTORIES MANUFACTURING PAPRIKA

Ayhan Onat

Kahramanmaraş Vocational School, K.Maraş Sütcü İmam University, KAHRAMANMARAŞ

Ahmet Korhan BİNARK

Technical Education Faculty, Marmara University, İSTANBUL

ABSTRACT

In this study; it is proposed that the low humidity, high and optimum flow rate air current can be obtained using a solar collector system . The other necessary conditions lacking initially or due to varying regime will be provided by adding automatic control elements into the circuit. The most advanced solar collector produced up to now was the one with turbulator, double transparent covers and latent heat storage (where Sodium sulfate decahydrate i.e. Glauber salt , $Na_2SO_4.10H_2O$ was employed) developed and tested in İstanbul Technical University, Department of Mechanical Engineering, Thermodynamics and Heat Transfer Laboratories and the results obtained were presented in literature and various scientific meetings.

1. INTRODUCTION

Paprika is an important vegetable widely produced in various regions all over the world. With a production capacity of 900,000 tones, Türkiye alone carries out 10% of the total production of the world. The Türkiye's production of paprika is mainly converted into dry pepper and meets most of the domestic demand and exported to other countries .

There are important problems in drying and manufacturing the paprika which became the symbol of Kahramanmaraş city. These problems decrease the production and the efficiency per area and increase the cost which cause the producers alienate from the paprika production . They also have very adverse effect upon the quality of the final product. In countries like Hungary and USA which have the biggest share in the world market, the product is mainly dried in dryers whereas in Türkiye this process is mainly carried out by spreading it upon the ground. The world standard related the manufacturing and processing paprika stipulates that the product be dried only in dryers. Drying the paprika on ground under direct sunlight causes various problems such as the product being mixed with dust and stones and the degradation of the taste due to frost and moisture during the nights . There is also a very big risk of the final product being contaminated by fungi called Aspergilus flavus from the ground which produce cancerogenous aflatoxin . [10,13]

In this study it was proposed that the air current with low relative humidity , high temperature and optimum flow rate necessary for drying paprika should be generated by a solar collector system. It is though that the conditions occur due to changing regime will be provided by the additional automatic control elements to the circuit. There is an advanced solar collector with turbulator , double transparent covers and latent heat storage (where Sodium sulfate decahydrate Glauber salt , $Na_2SO_4.10H_2O$ was employed) developed and tested in İstanbul Technical University, Department of Mechanical Engineering , Thermodynamics and Heat Transfer Laboratories and the results obtained were presented in literature. There were various tests carried out in this system for the initial experiments.[1,2,4]

2. Materlal and Method

2.1 Material

Three different types of collectors with the same dimensions were constructed. The dimension of all three collectors were 630 x 315 x 116 mm. The transparent cover was single layer glass in the I., double layer glass in the II. and III. collectors . The case material was timber due to low cost material and labor, the adsorbing plate was a black painted iron plane and the heat isolating material was glass wool one side of which was covered with aluminum foil. In the first collector the air flowed in a channel between the adsorbing plane and aluminum foil . In the second and third collectors however 44 celluloid table tennis balls painted with mat black were mounted in diagonal manner upon each plane and under which labyrinths were constructed. The labyrinths were designed enabling the air to make the maximum contact with the adsorbing and the intermediate planes. The air flowed on the plane first , then went under it and comes out at the opposite direction . The balls were filled with calcium chloride hexahydrate ($CaCl_2$. $6H_2O$; mp:27.22^{0}C) in the second collector and sodium sulfate decahydrate (Glauber salt; Na_2SO_4. $10H_2O$; mp:32^{0}C) due to their easily availability , cost effectiveness and low melting points. [3,5,7,9]

2.2 Method

The collectors were mounted on sloping plane with a slope of 41^0 in the north-southerly direction to preventing any sort of shadowing. The intensity of light was measured with a solarimeter. There mounted a vane at the ends of the air entrance pipes in order to adjust the air entrance rates. These wanes were connected with a single pipe and attached to a blower. the air output rates at the outlets of the collectors were monitored with hot wire anemometer, ambient temperature, the temperature of the adsorbing layer and the internal temperature of the balls were measured with 0.5 Fe-Constantan thermocouples and the rate of wind was determined with an anemometer. The experiments were carried out at air flow rates of 1.0 and 2.0 m/s.

The data obtained was evaluated as follows:

If the air temperatures at the inlet and outlet of the collector are θ_{in} and θ_{iout} and the temperature difference is

$$\Delta\theta_i = \theta_{iout} - \theta_{in} \ (^0C) \qquad i=1,2,3, \qquad (1)$$

The average air temperature is given as

$$\theta_{im} = (\theta_{in} + \theta_{iout})/2 \ (^0C) \qquad i=1,2,3, \qquad (2)$$

The efficiency for each collector is defined as

$$\eta_i(\%) = \frac{A_k V \rho c_p \Delta\theta_i t}{IA} 100 \qquad i=1,2,3 \qquad (3)$$

Where

A_k= The area of the air outlets (7.06858 x 10^{-4} m^2)

V= The rate of the air measured at the outlet of the collectors (1.0 - 2.0 m/s)

ρ and c_p = Density (kg/m^3) and the heat capacity (kJ/kg K) determined according to θ_{im}

$\Delta\theta_i$ = The temperature difference in ^{0}C given by equation (1)

t= Time (3600 s)

I = The total light density comes to the surface at a given time (1 hour) determined by the solarimeter (1Count = 0.5 kcal / m^2)

A= The total area in each collector exposed to the light (0,162981 m^2)

The heat stored by the balls according to the condition of $\theta_{t_1} < \theta_e < \theta_{t_2}$ is given by

$$Q = mc_{pk}(\theta_e - \theta_{t_1}) + mh_{ks} + mc_{ps}(\theta_{t_2} - \theta_e) \quad \text{(kJ)} \qquad (4)$$

For Calcium chloride hexa hydrate m = 0.6875 kg ; θ_e = 27.22^{0}C ; h_{ks} = 90 kJ/kg ; c_{pk} = 1.46 kJ/kgK and c_{ps} = 2.13 kJ/kgK and for Glauber salt m = 0.6875 kg ; θ_e = 32^{0}C ; h_{ks} = 225 kJ/kg ; c_{pk} = 1.76 kJ/kgK and c_{ps} = 3.30 kJ/kgK.[10,12,14]

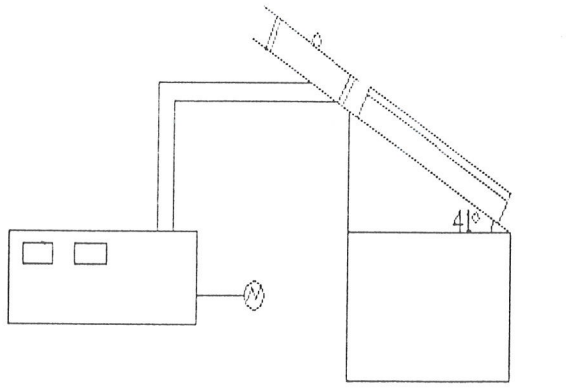

Figure 1.a) Solarimeter Connection

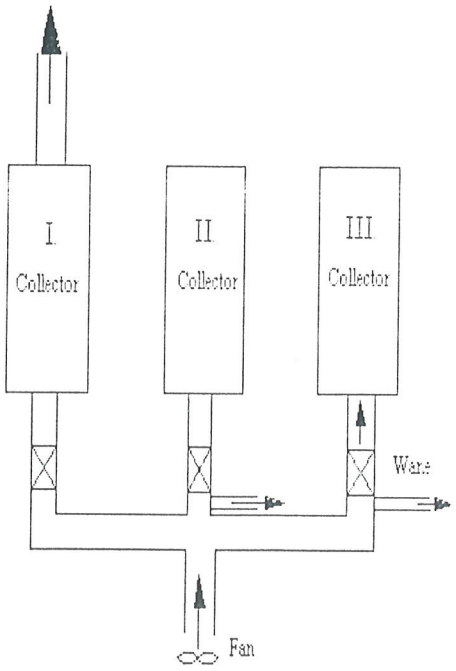

b) Fan-Wane-Collectors Connection

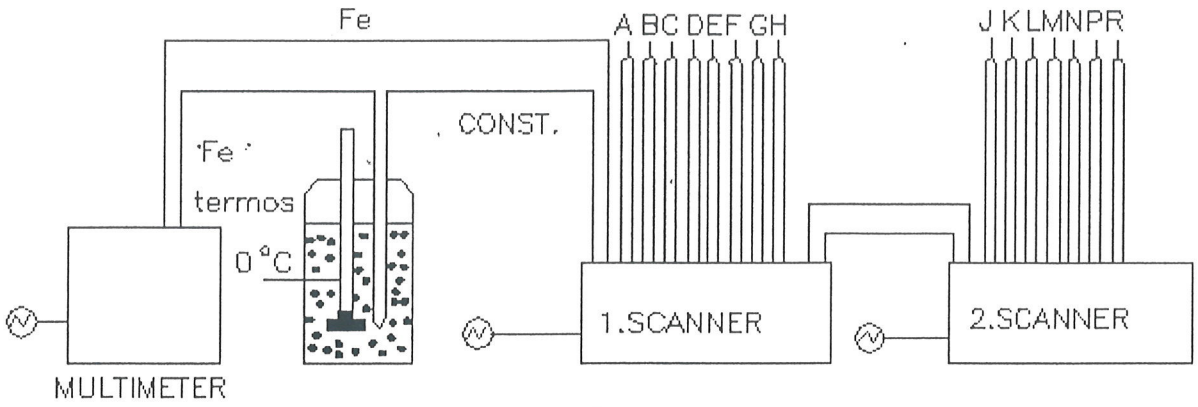

Figure 2. Circuit of temperature measurment

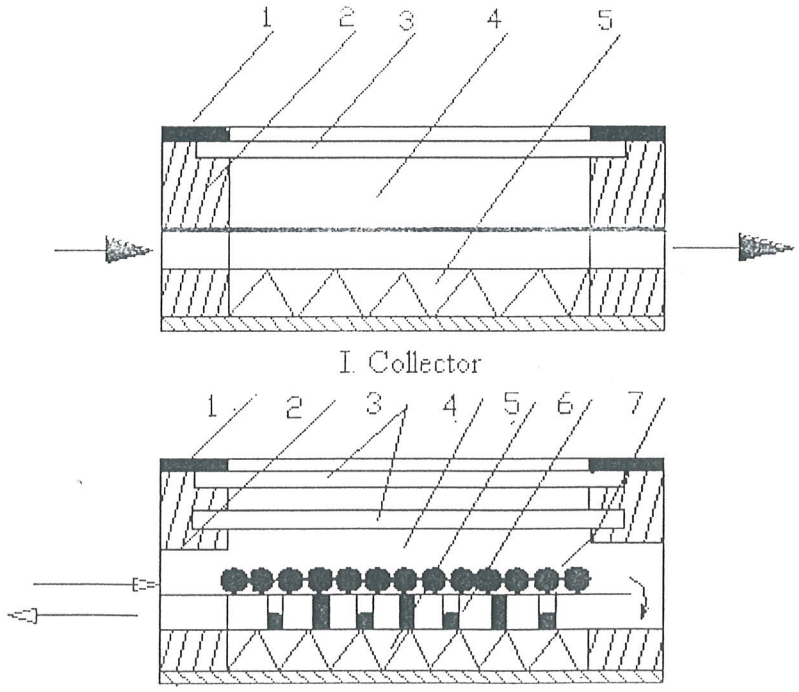

1. Glass Bars
2. Case
3. Transparent cover
4. Adsorbing plate
5. Aluminum foil
6. Labyrinths
7. Balls

Figure 3.The section of model collectors.

3 RESULTS AND DISCUSSION

3.1. Results

The heat stored in the balls at a flow rate of 1 and 2 m/sec. are Tabulated in Table 1 and Table 2. The temperature difference -time curves for the flow rates of 1 and 2 m/sec are shown in Figure 4 and 6, efficiency-time curves in Figures 5 and 7 respectively . The results indicated that the collector I heated the air more at a flow rate of 1 m/sec than at a flow rate of 2 m/sec. The collector efficiencies in the afternoons when the solar radiation decreased and the balls emitted the heat they stored into the air , the rate of increase in the temperature of the air and therefore the efficiencies of the collectors were in the order of collector III> collector II > collector I .[2,12]

3.2 Discussion

If one takes the fact that the properties of calcium chloride hexahydrate deteriorate as a result of number of phase changes and the superior heat storage capacity of Glauber salt it can be concluded that Glauber salt can be successfully employed in latent heat storage provided that necessary precautions are taken in geometrical and constructional aspects. [2,10]

It can also be conveniently said that the air passage having low relative humidity, high temperature and optimum flow rate necessary for the drying process of paprika can easily be provided by a standard size solar energy heat collector with an automatic control unit.

Time	II.Collector ($CaCl_2.6\ H_2O$) (kj)	III. Collector ($Na_2SO.10H_2O$) (kj)
9:30	118.64	256.60
10:30	119.39	268.63
11:30	118.00	261.06
12:30	118.27	262.10
13:30	119.18	262.40
14:30	119.71	262.69
15:30	119.07	267.30
16:30	116.09	237.30
17:30	111.29	237.30

Table 1 The heat that salt storage inside the balls.(for V= 1 m/sec)

Time	II.Collector ($CaCl_2.6\ H_2O$) (kj)	III. Collector ($Na_2SO.10H_2O$) (kj)
9:30	97.88	216.66
10:30	106.13	263.88
11:30	109.59	282.59
12:30	115.66	299.97
13:30	108.05	275.61
14:30	99.79	262.99
15:30	101.44	257.64
16:30	98.67	239.38
17:30	96.54	213.24

Table 2 The heat that salt storage inside the balls.(for V= 2 m/sec)

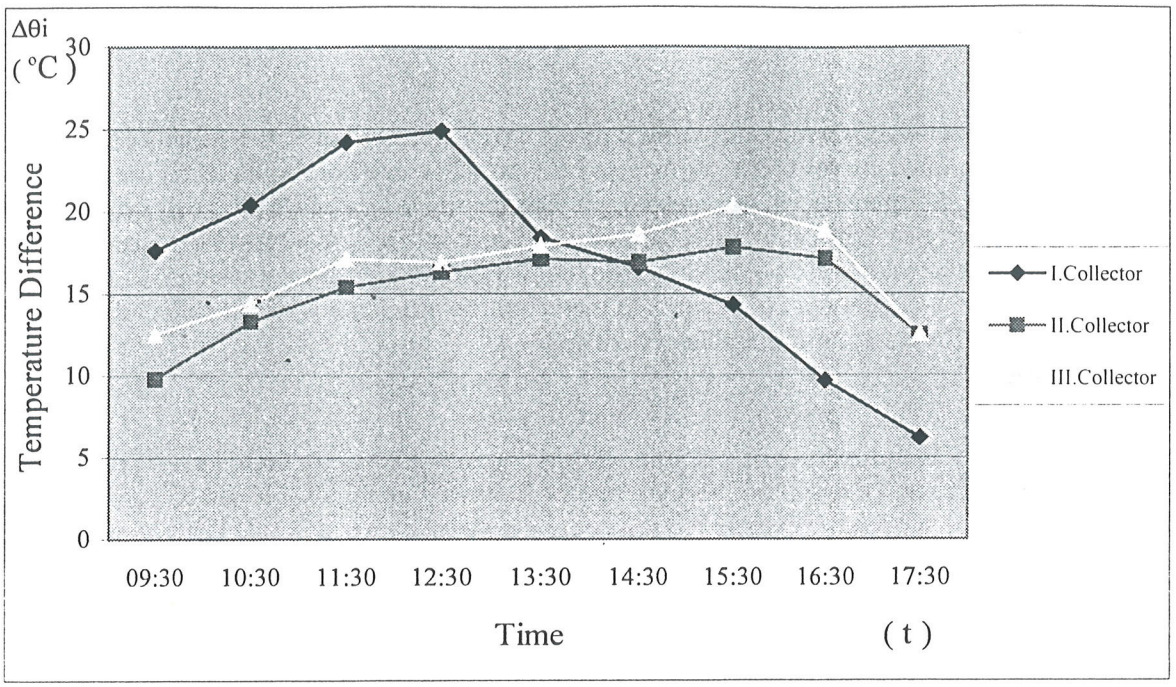

Figure 4. Temperature difference-time curves (V=1 m/sec.)

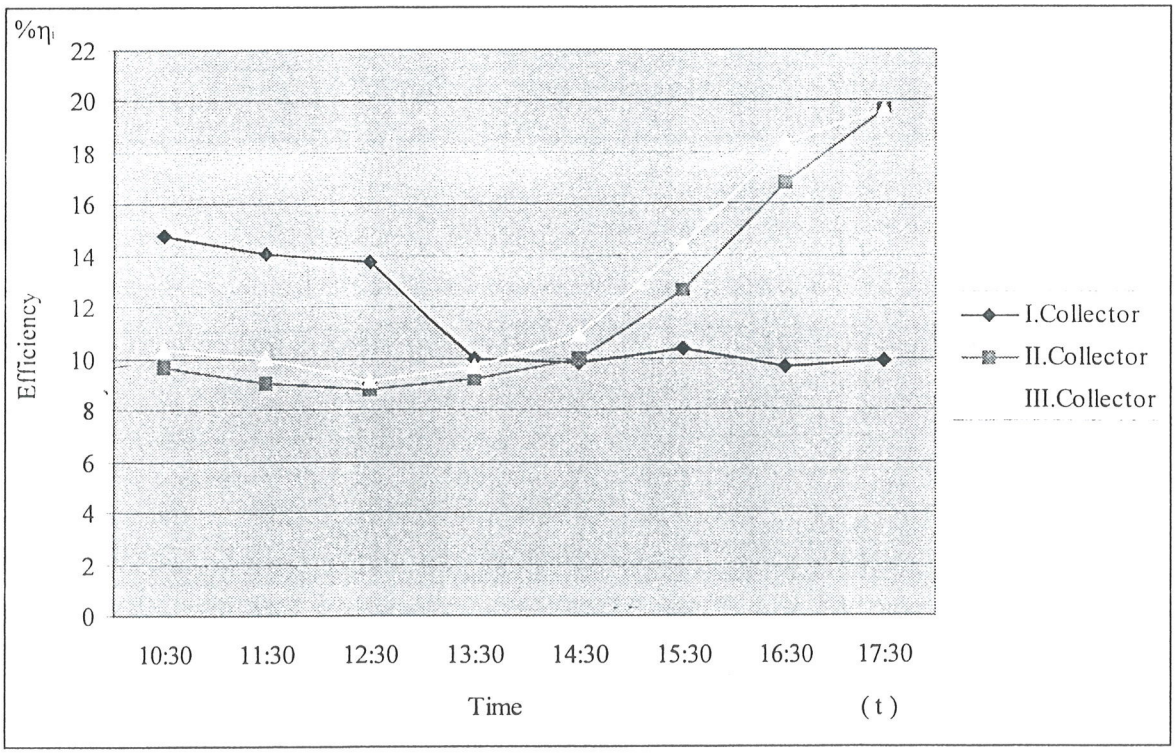

Figure 5. Efficiency-Time curves (V=1 m/sec.)

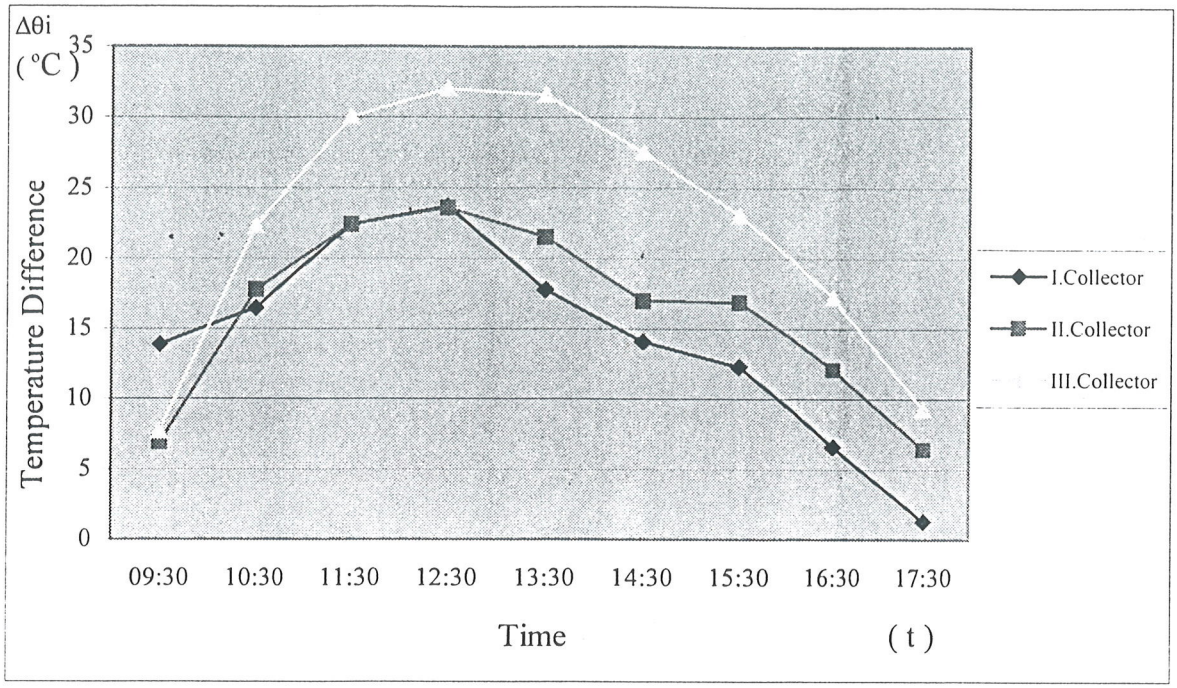

Figure 6. Temperature difference-time curves (V=2 m/sec.)

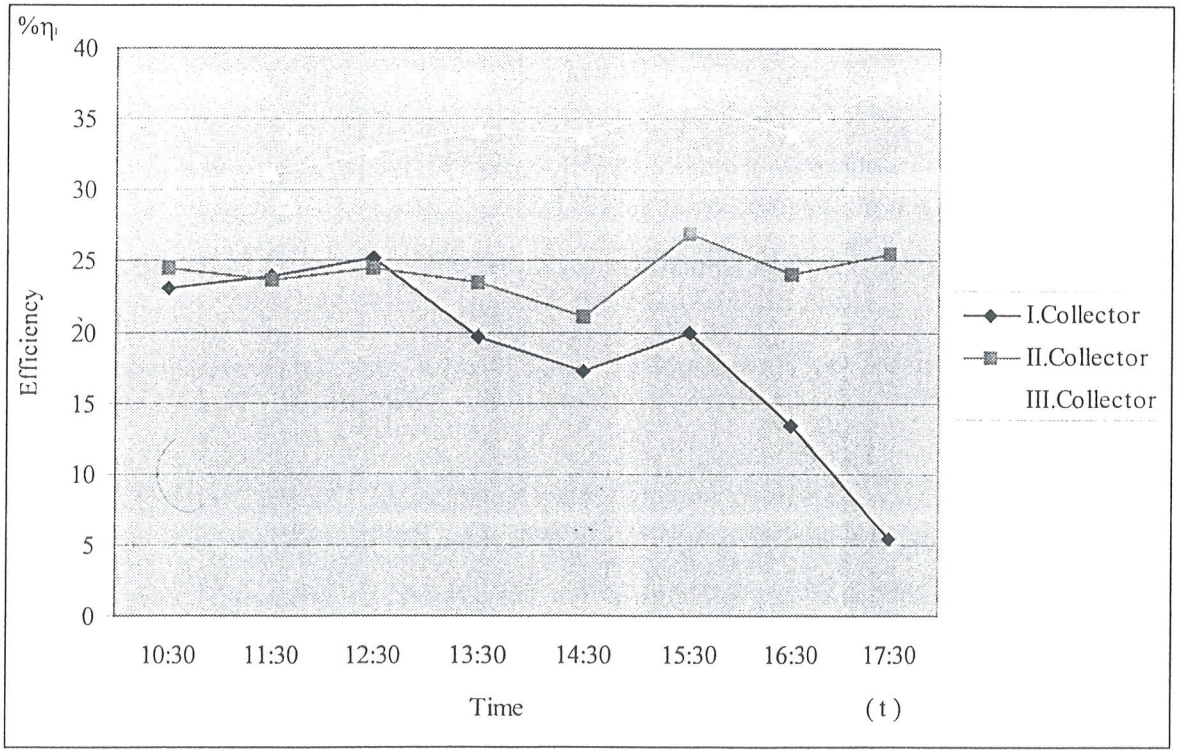

Figure 7. Efficiency-Time curves (V=2 m/sec.)

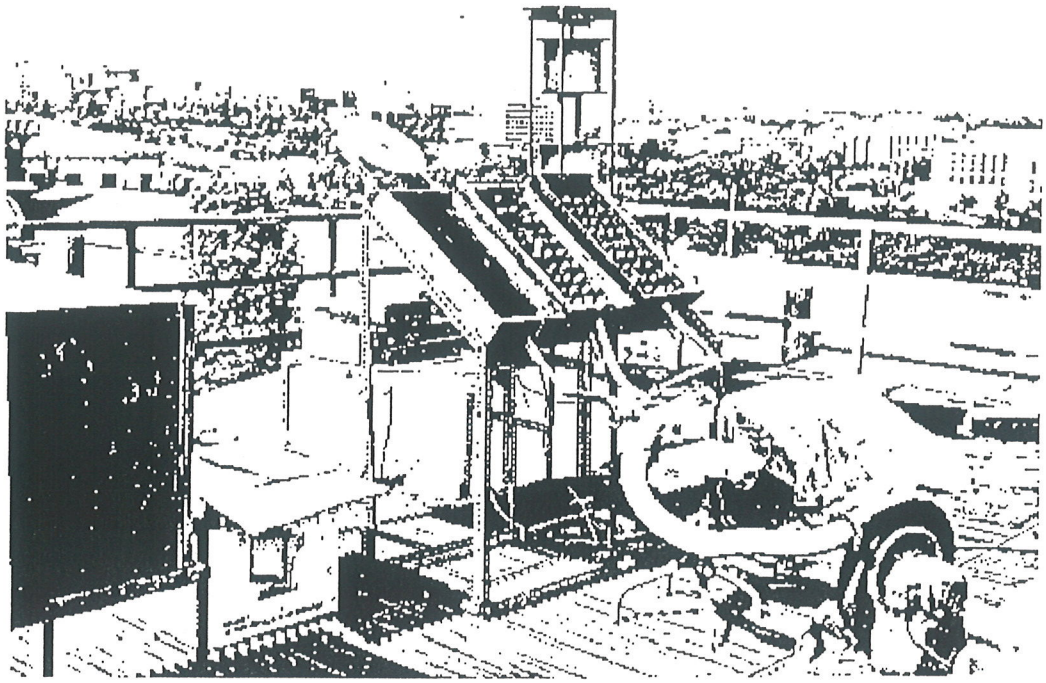

Figure 8. The set of experiment

REFERENCES:

1. Alış,K., "Havalı Kollektörlerde Güneş Enerjisinin Depolanması" , Binark, A.K. yönetiminde bitirme ödevi, Mak. Fak., İ.T.Ü.,İstanbul , 1995.

2. Altunbaş, M., "Havalı Kollektörle Isıtma", Binark A.K.,yönetiminde Bitirme Ödevi, Mak. Fak., İ.T.Ü., İstanbul, 1993.

3. Altunbaş,M., "Havalı Kollektörle Isıtma ve Ekserji Analizi", Binark, A.K, yönetiminde Y. Lisans Tezi F.B.E., İ.T.Ü. İstanbul, 1995.

4. Binark, A.K. ve Yavuz, H., "Hava Isıtmalı Güneş Kollektörleri", Anadolu Üniversitesi Isı Bilimi ve Tekniği 8. Ulusal Kongresi Bildiri Kitabı. Sh. 126 - 312, Eskişehir, 1991.

5. Binark, A.K. ve Altunbaş M., "Hava Isıtmalı Güneş Kollektörlerinde Isı Depolanması üzerine Bir Uygulama" 1.Ulusal Temiz Enerji Sempozumu Bildiri Kitabı, Sh. 41 - 49, İ.T.Ü. İstanbul, 1993

6. Binark, A.K. ve Deliçay, S., " Hava Isıtmalı Güneş Kollektörleri Dizaynı", Fırat Ü. Isı Bilimi ve Tekniği 9. Ulusal Kongresi Bildiri Kitabı, Sh. 204 - 212, Elazığ, 1993.

7. Binark A.K.,"Hava Isıtmalı Güneş Kollektörlerinin Türkiye'deki Uygulamaları", Enerji ve Çevre Sempozyomu Bildiri Kitabı, Sh. 82-89, Mersin Üniversitesi, Mersin 1994.

8. Binark, A.K., "Exergy Analysis For The Solar Air Collectors", Ecos '95, Proceedings, p.p. 539-544, İstanbul, 1995

9. Binark, A.K., Altunbaş, M. ve Alış, K."Hava Isıtmalı Güneş Kollektörlerinde Isı Depolayan Farklı Malzemeler Üzerine Bir Uygulama", Uluslararası katılımlı 10. Ulusal ısı Bilimi ve Tekniği Kongresi Bildirimi Kitabı, Cilt 1, Sh.283-302, Gazi Üniversitesi, Ankara 1995.

10. Buchlin, J.M., Experimental And Numerical Modelling of Solar Energy Storage in Rockbeds and Encapsulated Phase Change Material Pockings", Energy Storage Systems, 248-301, Klower Academic Publishers, 1989.

11. Elmas, C., "Kahramanmaraş'ta Kırmızı Biber İşletmelerinin Genel Durumu ve Biber İşleme Teknolojileri", Tuncer, İ.K. Yönetiminde Yüksek Lisans Tezi, KSÜ. F.B.E., Kahramanmaraş, 1996.

12. Lane, G.A., "Solar Heat Storage: Latent Heat Material", Volume II, CRC Press, Michigan 1986.

13. Tekinel, O., Tuncer, İ.K., Başer, N., Abak, K., Pakyürek, Y., Çoksöyler, N., "Kahramanmaraş Kırmızı Biberinde İhracata Yönelik Kaliteli Yetiştirme İşleme ve Pazarlamada Karşılaşılan Sorunlara Çözüm Arayışları", Panel, KSÜ.Yayınları:11, Kahramanmaraş, 1995.

14. Toksoy, M. and İlker, B.Z., "Melting In A Spherical Enclosure: An Experimental Study", Energy Storage Systems, 735-742, Klawer Academic Publishers, 1989.