PROCEEDINGS BOOK OF

SIXTH INTERNATIONAL CONFERENCE ON ADVANCES IN MECHANICAL ENGINEERING: ICAME 2021

ISBN : 978-975-461-599-9

ICAME 2021

OCTOBER 20-22, 2021

ISTANBUL, TURKEY

PLENARY SPEAKERS

İBRAHİM DİNÇER, ONTARIO INSTITUTE OF TECHNOLOGY, CANADA- YILDIZ TECHNICAL UNIVERSITY, TURKEY

YUNUS ÇENGEL, UNIVERSITY OF NEVADA, USA

INVITED SPEAKERS

ALI J. CHAMKHA, KUWAIT COLLEGE OF SCIENCE OF TECHNOLOGY, KUWAIT

ENRICO SCIUBBA, UNIVERSITY NICCOLO CUSANO, ITALY

ERIC DIMLA, VIETNAMESE-GERMAN UNIVERSITY, VIETNAM

HAKAN OZTOP, FIRAT UNIVERSITY, TURKEY

HUSEYIN HIZIROGLU, KETTERING UNIVERSITY, USA

KHAMIS ESSA, UNIVERSITY OF BIRMINGHAM, UK

M. HASANUZZAMAN, UNIVERSITY OF MALAYA, MALAYSIA

MIKHAIL A. SHEREMET, TOMSK STATE UNIVERSITY, RUSSIA

MUAMMER KOÇ, HAMAD BIN KHALIFA UNIVERSITY, QUATAR

NAEL BARAKAT, THE UNIVERSITY OF TEXAS AT TYLER, USA

OCTAVIO GARCIA VALLADERES, NATIONAL AUTONOMOUS UNIVERSITY OF MÉXICO, MEXICO

SALIM HIZIROGLU, OKLAHOMA STATE UNIVERSITY, USA

SALIM NEWAZ KAZI, UNIVERSITY OF MALAYA, MALAYSIA

TZVETELIN GUEORGUIEV, UNIVERSITY OF RUSE 'ANGEL KANCHEV', BULGARIA

HONORARY CHAIRMAN

Tamer Yılmaz, Rector, Yildiz Technical University, Turkey

CONFERENCE CHAIRMAN

Ali Fuat Güneri, Dean of Mechanical Engineering Faculty, Yildiz Technical University, Turkey

CONFERENCE CO-CHAIRMANS

- Orhan Çakır, Vice Dean of Mechanical Engineering Faculty, Yildiz Technical University, Turkey
- Zehra Yumurtacı, Department Head of Mechanical Engineering, Yildiz Technical University, Turkey
- Mihrigül Altan, Vice Chairperson of Mechanical Engineering Department, Editor-in Chief of Journal of Advances in Manufacturing Engineering, Yildiz Technical University, Turkey
- Ahmet Selim Dalkılıç, Editor-in Chief of Journal of Thermal Engineering and Sigma Journal of Engineering and Natural Sciences, Yildiz Technical University, Turkey

ORGANISING COMMITTEE

- Atilla Bıyıkoğlu, ASHRAE Turkish Chapter President President, Turkey
- Ayhan Onat, ASHRAE Turkish Chapter Elect, Turkey
- Nihan Çetin Demirel, Department Head of Industrial Engineering, Yildiz Technical University, Turkey
- Haydar Livatyalı, Department Head of Mechatronics Engineering, Yildiz Technical University, Turkey
- Alparslan Solak, Research Assistant, Department of Mechanical Engineering, Yildiz Technical University, Turkey
- Ahmet Doğan, Research Assistant, Department of Mechanical Engineering, Yildiz Technical University, Turkey
- Atalay Yıldırım, Research Assistant, Department of Mechanical Engineering, Yildiz Technical University, Turkey
- Beyza Gavcar, Research Assistant, Department of Mechanical Engineering, Yildiz Technical University, Turkey
- Fatih Sorgulu, Research Assistant, Department of Mechanical Engineering, Yildiz Technical University, Turkey
- Güneş Kolaşin, Research Assistant, Department of Mechanical Engineering, Yildiz Technical University, Turkey
- Merve Öztürk, Research Assistant, Department of Mechanical Engineering, Yildiz Technical University, Turkey
- Metehan Demirkol, Research Assistant, Department of Mechanical Engineering, Yildiz Technical University, Turkey
- Muhammet Camcı, Research Assistant, Department of Mechanical Engineering, Yildiz Technical University, Turkey
- Nurhan Üregen Güler, Research Assistant, Department of Mechanical Engineering, Yildiz Technical University, Turkey
- Oğuzhan Ağan, Research Assistant, Department of Mechanical Engineering, Yildiz Technical University, Turkey
- Onur Gezer, Research Assistant, Department of Mechanical Engineering, Yildiz Technical University, Turkey

- Özgün Balcı,Research Assistant, Department of Mechanical Engineering, Yildiz Technical University, Turkey
- Şafak Metin Kırkar, Research Assistant, Department of Mechanical Engineering, Yildiz Technical University, Turkey
- Uğur Emiroğlu, Research Assistant, Department of Mechanical Engineering, Yildiz Technical University, Turkey
- İbrahim Akgün, Research Assistant, Department of Mechanical Engineering, Yildiz Technical University, Turkey

SCIENTIFIC COMMITTEE

- Ahmed Kadhim Hussein, University of Babylon, Iraq
- Alperen Acar, Yildiz Technical University, Turkey
- Balaram Kundu, Jadavpur University, India
- Deniz Ulusarslan, Yildiz Technical University, Turkey
- Ehsan Ebrahimnia-Bajestan, Graduate University of Advanced Technology, Iran
- Enrico Scıubba, Roma University, Italy
- Godson Asirvatham Lazarus, Karunya University, India
- Levent Yüksek, Yildiz Technical University, Turkey
- Lutfiye Dahil, İstanbul Aydin University, Turkey
- Majiid R. Ayatollahi, Iran University of Science and Technology, Iran
- Mohamed Awad, Mansoura University, Egypt
- Moh'd A. Al-Nımr, Jordan University of Science and Technology, Jordan
- Naime Filiz Özdil, Adana Science and Technology University, Turkey
- Orkun Özener, Yildiz Technical University, Turkey
- Övün Işın, Yildiz Technical University, Turkey
- Patrice Estelle, Université Rennes 1, France
- Pravin Katare, Marathwada Mitra Mandal's College of Engineering, India
- Somchai Wongwises, King Mongkut's University of Technology Thonburi, Thailand
- Tarkan Sandalcı, Yildiz Technical University, Turkey
- Tolga Taner, Aksaray University, Turkey
- Tzvetelin Georgiev, University of Ruse, Bulgaria

ADVISORY COMMITTEE

- Ayşegül Akdoğan Eker, Division Head of Machine Material and Manufacturing Technology, Yildiz Technical University, Turkey
- Ferhat Dikmen, Division Head of Construction, Yildiz Technical University, Turkey
- Hakan Demir, Division Head of Heat and Thermodynamics, Yildiz Technical University, Turkey
- Muammer Özkan, Division Head of Automotive, Yildiz Technical University, Turkey
- Rahmi Güçlü, Division Head of Machine Teory, Sytem Dynamics and Control, Yildiz Technical University, Turkey

- Zehra Yumurtacı, Division Head of Hydromechanical and Hydroulic Machinery, Yildiz Technical University, Turkey
- Halil Özer, Division Head of Mechanical, Yildiz Technical University, Turkey

SESSION CHAIRMEN

- Alperen Acar, Yildiz Technical University, Turkey
- Bayram Şahin, Yildiz Technical University, Turkey
- Deniz Ulusarslan, Yildiz Technical University, Turkey
- Erdal Çetkin, Izmir Institute of Technology, Turkey
- Emel Akyol, Yildiz Technical University, Turkey
- Hadi Genceli, Yildiz Technical University, Turkey
- Halil Özer, Division Head of Mechanical, Yildiz Technical University, Turkey
- Hakan Demir, Division Head of Heat and Thermodynamics, Yildiz Technical University, Turkey
- Hatice Mercan, Yildiz Technical University, Turkey
- Haydar Livatyalı, Department Head of Mechatronics Engineering, Yildiz Technical University, Turkey
- Meral Bayraktar, Yildiz Technical University, Turkey
- Mine Uslu Uysal, Yildiz Technical University, Turkey
- Muhammet Camcı, Yildiz Technical University, Turkey
- Mustafa Kemal Sevindir, Yildiz Technical University, Turkey
- Müslüm Arıcı, Kocaeli University, Turkey
- Nader Javani, Yildiz Technical University, Turkey
- Nezir Aydın, Yildiz Technical University, Turkey
- Özgen Açıkgöz, Yildiz Technical University, Turkey
- Özgen Çolak Çakır, Yildiz Technical University, Turkey
- Serkan Erdem, Yildiz Technical University, Turkey
- Şaban Pusat, Yildiz Technical University, Turkey
- Şafak Metin Kırkar, Yildiz Technical University, Turkey
- Yasin Karagöz, Istanbul Medeniyet University, Turkey
- Zafer Gemici, Yildiz Technical University, Turkey

TOTAL NUMBER OF PAPERS FROM TURKEY

98

TOTAL NUMBER OF INTERNATIONAL PAPERS

82

TOTAL NUMBER OF PARTICIPANTS FROM TURKEY

166

TOTAL NUMBER OF INTERNATIONAL PARTICIPANTS

222

PARTICIPANTS COUNTRIES

Turkey, United States, Algeria, Morocco, Tajikistan, Bulgaria, Iran, Tunisia, Italy, Qatar, Brazil, France, Bangladesh, Malaysia, Kazakhstan, Spain, Vietnam, Kuwait, United Kingdom, Russia

AUTHORS	PAPER TITLE	PAGE NUMBER
Meltem Eryıldız, Elçin Özen, Muhammet M. Umutoğlu, Mirigül Altan	CASE STUDIES ON TOPOLOGICAL OPTIMIZATION FOR METAL ADDITIVE MANUFACTURING	1-13
Mustafa Can, Tezer Karayol, Turgay Şerbet, Anıl Akdoğan	ADVANTAGES AND DISADVANTAGES OF 3D PRINTING TECHNOLOGIES AND COMPARISON OF PROTOTYPE QUALITY	14-20
Ali A. Hmad, Nihad Dukhan	ANALYSIS OF METAL FOAM COOLING OF FUEL-CELL STACKS AND EXPERIMENTAL VERIFICATION ON AN INTERNAL CELL	21-36
Mehmet Akif Koç, Ramazan Şener	AN ADAPTIVE NEURO FUZZY CONTROL ALGORITHM FOR THE ONE-DOF VEHICLE SUSPENSION	37-44
Bahram Kaddour, Chaib Mohamed, Slimen Abdelkader, Benattou Bouchouicha	FATIGUE CHARACTERIZATION OF A WELDED JOINT IN AP A48	45-57
Hakan Uçar	STRUCTURAL IDENTIFICATION OF FIBER REINFORCED POLYMER (FRP) COMPOSITES USING EMBEDDED PIEZOELECTRIC TRANSDUCERS	58-64
Sonya Redjala, Said Azem, Nourredine Ait Hocine	CHANGE IN MECHANICAL PROPERTIES OF AN AGED POLYCARBONATE	65-69
Mama Chouitek, Abdellah Chaouch	STUDY AND MODELING OF THE LINEAR MOTOR WITH FEMM SOFTWARE	70-81
Fouad Ternane, Mustapha Benachour, Fethi Sebaa, Nadjia Benachour	STATISTICAL ANALYSIS OF WELDING PARAMETERS ON THE TENSILE STRENGTH OF DISSIMILAR MATERIALS	81-88
Madi Rafik, Nedjhioui Oussama	SOLUTIONS FOR REDUCING THE SEISMIC ACTION IN CONSTRUCTIONS	89-96
Mine Uslu Uysal	DISPLACEMENT BEHAVIOR OF SINGLE LAP JOINTS MADE FROM FUNCTIONALLY GRADED POLYMERIC MATERIALS (FGPMS)	97-101
Yasemin Korkmaz, Kürşat Gültekin	WATER ABSORPTION OF MODIFIED BORON NANOPARTICLES DOPED EPOXY NANOCOMPOSITES	102-111
Okan Bakbak, Besim Emre Birkan, Alperen Acar, Ozgen Colak	MECHANICAL BEHAVIOR OF FUNCTIONALIZED GRAPHENE-EPOXY NANOCOMPOSITES AROUND GLASS TRANSITION TEMPERATURE	112-117
Murat Kıyak	INVESTIGATION OF THE EFFECT OF TWIST DRILL FEATURES ON DRILLING ENERGY	118-125
Omar BELHADJ, Hamidou BENZENINE, Rachid SAIM	ECONOMIC AND ENVIRONMENT BENEFITS IN USING SOLAR CHIMNEY FOR NATURAL VENTILATION IN BUILDINGS	126-135

M. Çay, H. Özer	EFFECT OF VISCOELASTICITY ON STIFFNESS PREDICTION FOR THE BI-ADHESIVE SINGLE LAP JOINTS	136-145
Mehmet Okumuş, Zafer Gemici, Hakan Demir	A COMPARATIVE ENERGY MODELLING ANALYSIS OF AN INTERMITTENT USED SPACE: A MOSQUE EXAMPLE	146-161
A. Messai, A. Hamzaoui	FREE VIBRATION ANALYSIS OF FGM PLATES USING STRAIN BASED BRICK ELEMENT IMPLEMENTED IN ABAQUS	162-168
Mehmet Şahbaz	EXPERIMENTAL AND NUMERICAL INVESTIGATION OF THE EFFECTS OF HOLE DIAMETER ON THE TENSILE STRENGTH OF STEEL PLATE	169-172
Abdelghani Laouer	INVESTIGATING THE EFFECT OF HYBRID NANOPARTICLES (CU AND AL2O3) ON MELTING PROCESS WITH PHASE-CHANGE INSID INCLINED RECTANGULAR ENCLOSURE	173-181
Elena Borucu, İbrahim Doymaz	HOT AIR DRYING OF KIWIFRUIT SLICES	182-194
Mustafa Burak Bahadır, Ahmet Çağlar, Mehmed Rafet Özdemir	SIMULATION AND ANALYSIS OF A SOLAR ORGANIC RANKINE CYCLE	195-204
Nadia Tebbal , Zine El Abidine Rahmouni , Mekki Maza, Anwar Bouguerra , Fatma Bahache	COMBINED EFFECT OF METAL FIBERS, GLASS SAND AND AN AIR-ENTRAINING AGENT ON THE MECHANICAL BEHAVIOUR OF MORTAR	205-214
Hamdi Levent Koçalioğlu, Ayhan Onat	UNIVERSITY CAMPUS BUILDING ENERGY MODELING: A CASE STUDY	215-221
Samira Maou, Yazid Meftaha, Antoine Kervoelenc, Ahmed Meghezzi, Yves Grohens	THERMOPHYSICAL BEHAVIOR OF THE TREATED DATE PALM TREE LEAF-REINFORCED POLYVINYLCHLORIDE/STYRENE ACRYLONITRILE COPOLYMER/LOW-DENSITY POLYETHYLENE TERNARY COMPOSITE	222-231
Yazid Meftah, Benhalima Naima, Ziane Widad, Samira Maou, Ahmed Meghezzi	THE FLEXURAL, THERMAL, DYNAMICAL MECHANICAL, AND WATER UPTAKE PROPERTIES OF UNSATURATED POLYESTER HYBRID COMPOSITES FILLED WITH WASTE PET BOTTLE FIBERS AND DATE PALM FIBERS	232-240
Youssef Tizakast, Mourad Kaddiri, Mohamed Lamsaadi	EFFECT OF BUOYANCY RATIO ON MIXED CONVECTION HEAT AND MASS TRANSFER CORRELATIONS IN SHALLOW RECTANGULAR CAVITIES WITH DOUBLE LID-DRIVEN BOUNDARIES FILLED WITH NON-NEWTONIAN POWER-LAW FLUIDS	241-255

UNIVERSITY CAMPUS BUILDING ENERGY MODELING: A CASE STUDY

Hamdi Levent Koçalioğlu [1, *], Ayhan Onat [2, *]

ABSTRACT

Several universities in Turkey are implementing efforts to make their campuses more sustainable. Typically, their sustainability initiatives focus on improving the energy efficiency of new and existing buildings. There are several ways to improve building's energy efficiency and building energy models may be used to evaluate these strategies. While energy models are frequently utilized during the design of new buildings, they are rarely utilized to analyze the actual performance of those buildings. This paper presents a case study in which a prominent energy modeling software (EnergyPlus) was used to assess the performance of a 12000-square-meter university building. The building was built in 1995 and has undergone significant alterations over the years. The aim of the research is to utilize energy modeling software to estimate the building's energy use and compare it to actual utility data. This paper discusses the data collection method, the modeling process, and the analysis of modeling outputs.

Keywords: *Building energy modeling, Energy use, Existing buildings.*

INTRODUCTION

Several universities in Turkey are implementing efforts to make their campuses more sustainable [1]. Universities have a special responsibility for their societies and for educating the individuals who will develop the social, economic, and technical solutions necessary to reverse global warming and contribute to the development of a healthy and sustainable society [2]. The buildings and buildings construction sectors combined are responsible for over one-third of global final energy consumption and nearly 40% of total direct and indirect CO_2 emissions [3]. Thus, every efficient climate change mitigation strategy should include measures to dramatically reduce building energy use.

Increasing the energy performance of the buildings is one of the most effective strategies to significantly reduce GHG emissions. At present, about 35% of the European Union’s buildings are over 50 years old and almost 75% of the building stock is energy inefficient. At the same time, only about 1% of the building stock is renovated each year. Renovation of existing buildings can lead to significant energy savings, as it could reduce the EU’s total energy consumption by 5-6% and lower CO_2 emissions by about 5% [4]. Therefore, there is an increasing demand for energy modeling tools to assist in the study of an existing building's energy use.

Building Energy Modeling (BEM) is the practice of using computer-based simulation software to perform a detailed analysis of a building’s energy use and energy-using systems. The simulation software works by enacting a mathematical model that provides an approximate representation of the building. BEM offers an alternative approach that encourages customized, integrated design solutions, which offer deeper savings. Using BEM to compare energy-efficiency options directs design decisions prior to construction. It also guides existing building projects to optimize operation or explore retrofit opportunities [5].

By accounting for actual construction materials and HVAC systems, BEMs can estimate a building's energy use. BEMs also take into consideration the impact of occupants on energy use by setting occupant schedules. Occupants have a major impact on thermal load and ventilation needs, which in turn affects the demand on HVAC systems and fans [6].

[1] Department of Mechanical Engineering, Marmara University, Istanbul, Turkey
**E-mail address: leventkocalioglu@marun.edu.tr,*
Orcid id: https://orcid.org/0000-0002-5584-5938
[2] Department of Mechanical Engineering, Marmara University, Istanbul, Turkey
**E-mail address: ayhanonat@marmara.edu.tr,*
Orcid id: https://orcid.org/0000-0001-9737-6300

While energy models are frequently utilized during the design of new buildings, they are rarely utilized to analyze the actual performance of those buildings. For existing buildings, every effort to find optimal energy efficiency methods should begin with an understanding of how the building presently consumes energy through the use of an energy model that accurately simulates real building performance. Actual system performance fluctuates throughout the course of a building's life cycle since buildings' systems deteriorate and their efficiency decrease with time, especially if they are not properly maintained. Failures in mechanical systems and lighting equipment alone can account for between 2% and 11% of a commercial building's overall energy use [7].

This paper presents a case study in which a prominent energy modeling software (EnergyPlus) was used to assess the performance of a 12000 square meter university building. The building was built in 1995 and has undergone significant alterations over the years. The aim of the research is to utilize energy modeling software to estimate the building's energy use and compare it to actual utility data. This paper discusses the data collection method, the modeling process, and the analysis of modeling outputs.

DATA COLLECTION

With the advancement of building energy modeling technologies, the quantity of user input and data necessary to develop the models increased. While some of the needed data is readily available, some require greater effort to collect with sufficient accuracy. Accurately obtaining the needed data is particularly difficult in older buildings, as the information contained in designs may be out of date because of renovations undertaken. The following data are required for creating an energy model for a building.

Architectural Data: The architectural design of a building has a significant impact on its energy use. When architects and designers have a solid understanding of the complicated interactions between building design and energy use, they can make educated and cost-effective decisions regarding energy-saving measures in their buildings [8]. The architectural data required for modeling are mostly the following:

- The building's orientation, the city in which it is located (for weather details), and the building's relative location in relation to any tall building that throws a shadow on it.
- The number of floors, the total square meter of conditioned, unconditioned, and ventilated spaces (m^2) on each floor.
- The materials used to create all external walls, roof and floor slabs, windows and doors, the thickness and type of insulation used in walls, the flooring material used in walls, and the kind of wall-slab construction connection.
- The total number, size, and location of external doors and windows, as well as any overhangs, fins, blinds, or curtains on windows.
- U-value (conductance) and shading coefficient (SC) of external window and door materials.

Mechanical Data: HVAC systems are among the most energy-intensive systems in many buildings [9]. As a result, precise information on their size and zoning is critical.

- The division of conditioned floor area into separate areas (zones) based on the AHUs that serve them.
- Each HVAC zone is designated to a certain activity (e.g., classroom, library, office, etc.) and is assigned a m^2/person and a minimum m^3/person.
- Each AHU is established with a Minimum Design Flow (m^3/m^2) and a minimum design flow for the core and perimeter zones.
- System and equipment description, the cooling and heating sources, the hot water supply, and the return air channel.
- Each zone has a set maximum and lowest set-point temperature for both occupied and unoccupied states.

Electrical Data: Another significant user of power in buildings is electrical equipment.

- Lighting types present in buildings (including interior and exterior end uses), interior lighting, office equipment, and exterior lighting loads and profiles (W/m^2).

Internal Loads Data:

- Calculate maximum occupancy (m^2/person)
- Wattage per square meter (W/ m^2) of all lighting fixtures installed in the building
- W/m^2 of all electrical equipment installed in the building.

Operations Data: Because operation schedules have a significant impact on energy use, it is critical to have precise information about them.

- The number of seasons in the year, their beginning and ending dates, building opening, and closing times, and occupancy, lighting, and miscellaneous (office) equipment schedules.
- Set-point temperatures for both occupied and unoccupied circumstances.
- Data on the size (kilowatts) and quantity of all sorts of fans (exhaust, ventilation, return) in the building.

ENERGY MODELING

DesignBuilder is used to create full three-dimensional architectural models that are exported to EnergyPlus (v9.4) as an input file which is used for analysis of existing building energy performance.

EnergyPlus implements detailed building physics for air and heat transfer including treating radiative and convective heat-transfer separately to support modeling of radiant systems and calculation of thermal comfort metrics; calculates lighting, shading, and visual comfort metrics; supports flexible component-level configuration of HVAC, plant, and refrigeration systems; includes a large set of HVAC and plant component models; simulates sub-hourly time steps to handle fast system dynamics and control strategies; and has a programmable external interface for modeling control sequences and interfacing with other analyses [10].

The case building, located in the main campus of Marmara University, Istanbul, Turkey, consists of two connected buildings which are rectorate building and library building. The building has a reinforced concrete building with filled in brick walls and with heat insulation. The fenestration of the building consists of aluminum frames without thermal break and double-pane clear glass with U-value of 3.2 W/m^2K. Heating demand is met by an old non-condensing boiler with 500 kW heating capacity using natural gas as the primary energy source. Cooling demand is met by an old air-cooled chiller with 650 kW cooling capacity for library building and 20 air conditioning split units for administrative building spaces. Air Handling Unit (AHU) provides outdoor air for library building spaces. The AHU total supply air flow rate is 19500 m^3/h, heating and cooling coils are supplied by boiler and chiller. There are no individual indoor thermostats for different parts of the building. Main thermostat setpoint temperatures were designed as 23 ºC for heating season and 24 ºC for cooling season. The library building lighting system have recently renovated with LED lamps, while most of the administrative building office areas have fluorescent lamps. The performance of a 12000-square-meter university facility was evaluated using Energyplus. The building was built in 1995 and has undergone significant alterations over the years. The building includes offices, meeting rooms, corridors and has a library with reading areas. The administrative building is used between 8am and 6pm on weekdays, while some part of the library building is used 7/24. For energy simulation weather data, Typical Meteorological Year (TMY) of Istanbul Goztepe region weather file is used.

General building information and building envelope elements U-values are provided in Table 1 and Table 2, respectively.

Table 1. Building information

Building Information	
Building Area (m^2)	12000
Conditioned Building Area (m^2)	8610
Façade Surface Area (m^2)	4690
Roof Area (m^2)	2300
Glazing Area (m^2)	820
Glazing Ratio (%)	17.5

Table 2. Building Envelope Elements and U-values

Building Elements	**U-Value (W/m^2K)**
External Walls	0.60
Roof	0.42
Slab On Grade Floor	0.56

Authorized personnel from the Department of Construction and Maintenance provided the necessary data, which included CAD drawings of all levels, floor plans, HVAC designs and final energy audit report dated December 2020. Provided energy audit report includes general building information, building occupancy patterns, HVAC, and lighting system/equipment description. Building energy model generated through observations from site visit and measurements taken from 2020 energy audit. The building depicted in Figure 1 is one utilized in the case study.



Figure 1. The building used in the case study

Additionally, the building had been visited twice with the assistance of university authorized personnel, who discussed the configuration of the building's HVAC systems and any modifications made since their initial installation. Moreover, university authorized personnel provided utility bills for 2018, 2019, and 2020, broken down by natural gas and electricity use.

As seen in Figure 2 and Figure 3, EnergyPlus model was generated with the following input:

- Computer-aided design (CAD) drawings of all floors,
- The orientation of the building and its geographical location – the floor-to-floor heights
- Construction of the external and interior envelopes of buildings (roofs, walls, slabs) – materials and insulation,
- Fenestration details, HVAC zoning of all floors, assigning these zones to various activities,
- Building operating schedule, building occupancy details, lighting and office equipment load details, details of all HVAC systems, settings for ventilation and airflow in all areas.

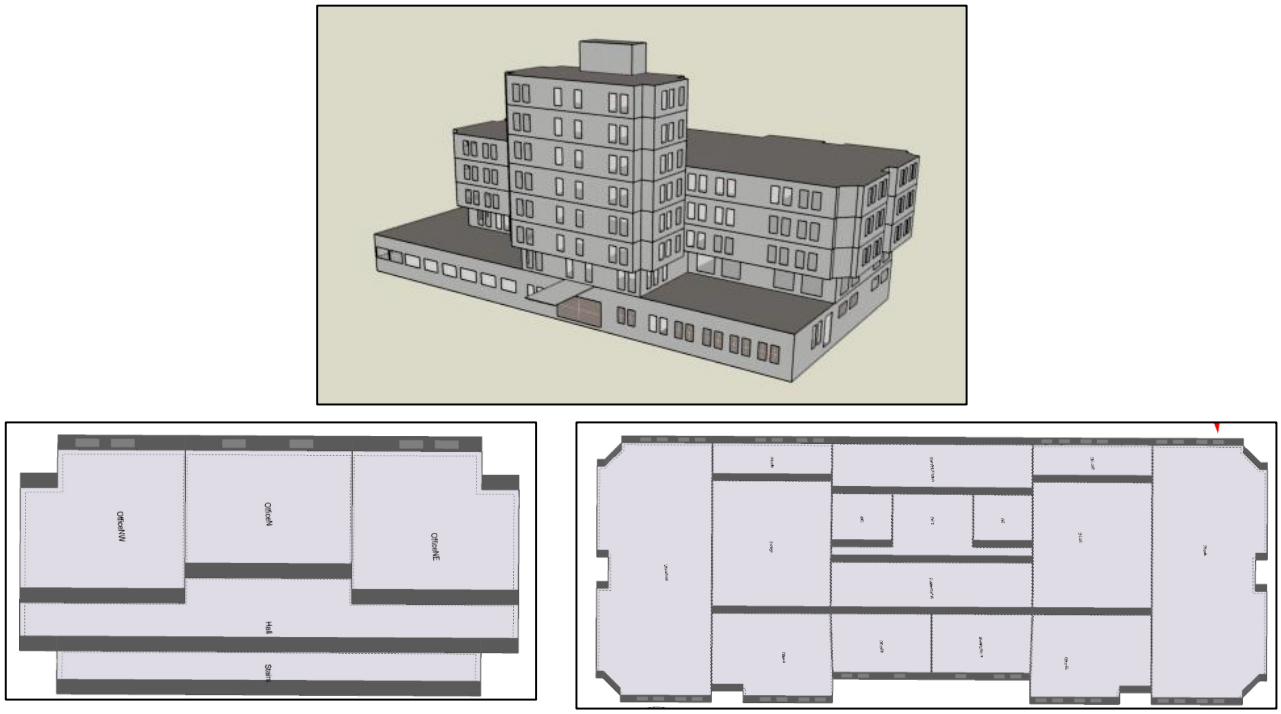

Figure 2. DesignBuilder rendering of the building and floor plans

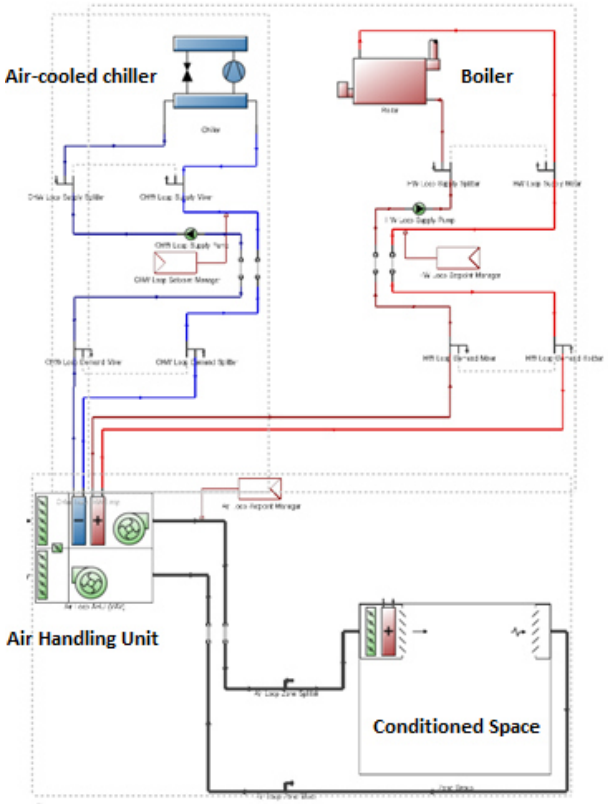

Figure 3. HVAC system schematic view for library building

RESULTS AND DISCUSSION

The results of the simulation are depicted in Figure 4 and Figure 5. The numbers depict both actual and modeled energy use for natural gas and electricity, respectively. As seen in the images, while the modeled total yearly utility consumption is similar to the actual energy use, there are significant energy use difference in terms of month-to-month utility use. These differences are due to a variety of variables, which are discussed in further detail in the next section.

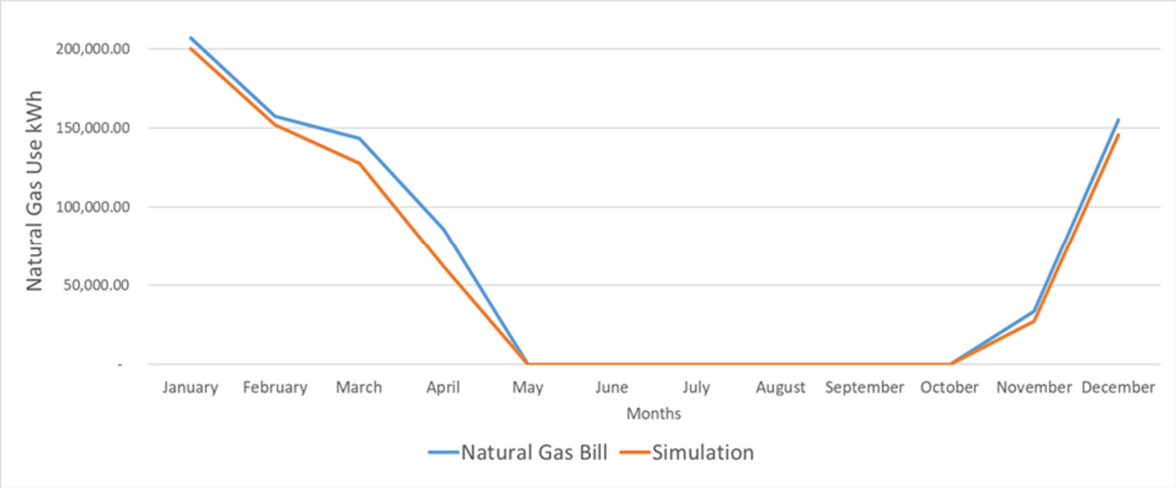

Actual Annual Natural Gas Use (kWh)	Modeled Annual Natural Gas Use (kWh)
783,097.28	716,022.47

Figure 4. Graph comparing actual natural gas use with that simulated by the model

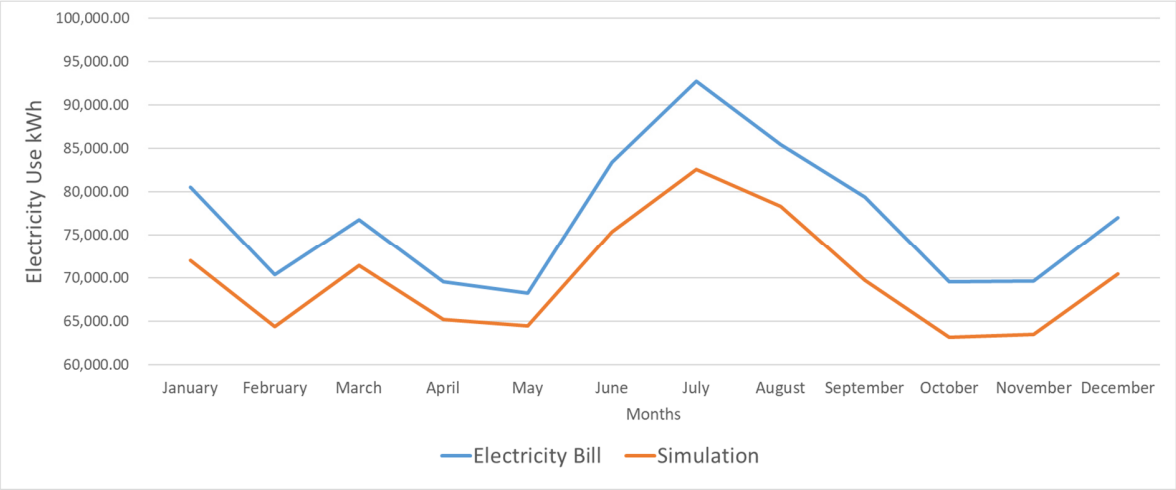

Actual Annual Electricity Use (kWh)	Modeled Annual Electricity Use (kWh)
922,770.81	840,878.42

Figure 5. Graph comparing actual electricity use with that simulated by the model

The parameters affecting the overall energy use of a building can be categorized as follows:

- The climate (e.g., outdoor air temperature, solar radiation, wind velocity, etc.),
- Characteristics of buildings (e.g., type, area, orientation, construction materials etc.)
- Building services systems and operation (space cooling/heating, hot water supply, etc.)
- The behavior and activities of building occupants (e.g., time they come and leave the building, whether they turn light off when they leave, etc.)

Among these categories, predicting the behavior and activities of building occupants with sufficient accuracy is the most difficult and challenging of getting accurate data on building occupant behavior. Other studies have also found it difficult to fully characterize the influences of occupants' behavior and activities through simulation, owing to the diversity and complexity of users' behavior in real life [11].

CONCLUSION

It is critical that any sustainability initiative aimed at reducing greenhouse emissions includes major efforts to enhance building energy efficiency. There are several ways for improving a building's energy efficiency, and energy models should be used to compare these strategies. For existing buildings, every attempt to find optimal energy efficiency measures should begin with an energy model that depicts how the building currently consumes energy. The article discussed a case study in which an energy model of an existing university building was developed. Energyplus was utilized to assess the building's performance. Although the modeled annual energy use is comparable to the actual energy use, there are greater variances in monthly energy use between the actual and modeled results due to the current difficulties in obtaining data accurately describing building occupants' behavior/activities and building’s thermal properties, temperature set points, and internal loads. A new tool that can aid in better predicting occupant behavior and activity through people counters to track the occupancy of each room and area.

REFERENCES

[1] Erten D., Kampüs Sürdürülebilirliğine Bütünleşik Bir Yaklaşım: Piri Reis Üniversitesi, ITU Vakfı Dergisi Eylül 2014, Volume 65 pp.103-104.
[2] American College & University Presidents’ Climate Commitment, 2014. http://www.presidentsclimatecommitment.org/about/mission-history, Access date:13.08.2021.
[3] Global Status Report for Buildings and Construction, 2019. https://www.iea.org/reports/tracking-buildings-2020, Access date:18.08.2021.
[4] Europen Commission Energy Performance of Buildings Directive. https://ec.europa.eu/energy/topics/energy-efficiency/energy-efficient-buildings/energy-performance-buildings-directive_en, Access date:16.08.2021.
[5] EnergyPlus Documentation, EnergyPlus Documentation Engineering Reference, https://energyplus.net/sites/all/modules/custom/nrel_custom/pdfs/pdfs_v9.3.0/EngineeringReference.pdf, Access date:10.08.2021.
[6] Ryan, E. M., & Sanquist, T. F. Validation of building energy modeling tools under idealized and realistic. Energy and Buildings, 2011.
[7] Heo, Y., Choudhary, R., & Augenbroe, G. Calibration of building energy models for retrofit analysis under uncertainty. Energy and Buildings, 2011.
[8] http://www.glumac.com/greenResources/GR_EnergyModeling.html. Access date:23.08.2021.
[9] T Fong, K., Hanby, V., & Chow, T. HVAC system optimization for energy management. Buildings and Energy, 2005.
[10] Crawley, D.B., L.K. Lawrie, F.C. Winkelmann, W.F. Buhl, Y. Joe Huang, C.O. Pedersen, R.K. Strand, R.J. Liesen, D.E. Fisher, M.J. Witte, and J. Glazer. EnergyPlus: Creating a new-generation building energy simulation program. Energy and Buildings 2001;33(4):319-331.
[11] Yu, Z., Fung, B. C., Haghighat, F., Yoshino, H., & Morofsky, E. A systematic procedure to study the influence of occupant behavior on building. Energy and Buildings, 2011.