ResearchGate

See discussions, stats, and author profiles for this publication at: https://www.researchgate.net/publication/337945876

EXERGY ANALYSIS OF A DOMESTIC REFRIGERATOR INCLUDING A THERMOELECTRIC COOLING SYSTEM

Conference Paper · September 2019

CITATIONS
0

READS
108

3 authors:



Engin Söylemez
Norwegian University of Science and Technology
4 PUBLICATIONS **10** CITATIONS
SEE PROFILE



Emre Alpman
Marmara University
48 PUBLICATIONS **205** CITATIONS
SEE PROFILE



Ayhan Onat
Marmara University
51 PUBLICATIONS **37** CITATIONS
SEE PROFILE

Some of the authors of this publication are also working on these related projects:

THE APPLICATION OF ANALYTICAL HIERARCHY PROCESS (AHP) METHOD IN PURCHASING PROCESS OF SPLIT TYPE AIR CONDITIONERS View project

Wind Turbines View project

All content following this page was uploaded by Emre Alpman on 16 December 2019.

The user has requested enhancement of the downloaded file.

EXERGY ANALYSIS OF A DOMESTIC REFRIGERATOR INCLUDING A THERMOELECTRIC COOLING SYSTEM

Engin SÖYLEMEZ*, Emre ALPMAN, Ayhan ONAT*****
* BSH Bosch, Development Center for Cooling, Tekirdağ, Turkey
** Marmara University, Faculty of Engineering, Department of Mechanical Engineering, Istanbul, Turkey
*** Marmara University, Faculty of Technology, Department of Mechanical Engineering, Istanbul, Turkey

Abstract: In this work, exergetic efficiency of a fridge compartment of a domestic refrigerator, was investigated through exergy analysis. The refrigerator is actually a hybrid refrigerator that combines thermoelectric cooling and vapour compression refrigeration cycle, based on reference Bosch KGN39 Premium refrigerator with an energy efficiency class of A+++. It has three compartments: Fridge, chill and freezer. The fridge compartment is cooled by a thermoelectric/Peltier cooler while the rest of the compartments are cooled by the compressor-based system. The target of the work is to estimate the second law efficiency of the system in order to find out if there is any room for improvements to increase the system COP/efficiency. It is needed because, although thermoelectric coolers have promising specifications for particularly small-scale cooling applications such as being compact, less need for maintenance, etc., they have less COP/efficiency values compared to compressor-based vapour compression cycle. The real testing data was used for the calculations. The tests were performed in compliance with new IEC62552:2015 standard in climatic chambers. The results of exergetic analysis showed that there is still potential to improve cooling performance for the fridge compartment. The possible enhancement steps were discussed in the context of this work.
Keywords: Cooling, Efficiency, Exergy, Refrigerator, Thermoelectric

1. Introduction

Exergy, known as available energy, essergy, utilizable energy, available energy, and availability, represents the maximum work done by a system and helps in analysing energy and processes [1]. It is also a critical property as being used as a term for the measure of energy quality. All real energy activities and processes are irreversible; consequently, energy loses its quality, it means, exergy is destructed.

Exergy analysis is a powerful tool, which provides clear idea about the losses in energy quality or usefulness for real processes. It can be applied almost all engineering applications, energy related activities and processes. It has been taken into consideration from energy-conversion systems and aeronautical applications to chemical applications.

This tool has also been applied to refrigeration systems, specifically to domestic refrigerators. Several studies focused on the thermodynamic and performance optimisation of Carnot (irreversible) refrigerators to obtain the most optimum performance characteristics for these refrigerators based on 2nd law efficiency [2] [3] [4] [5]. The main scientific interests have been given to exergy analysis of vapour compression cooling system and its components in domestic refrigerators due to the fact that this system is the dominant technology used for household cooling appliances. Especially, the effect and performance analysis of alternative refrigerants to R134a such as R600a, R290/R600a mixture, R1234yfa and ternary hydrocarbon mixtures have been investigated [6] [7] [8] [9] [10].

The studies in relation with the exergy analysis for thermoelectric cooling have limited interests. Kaushik et al. [11] investigated a thermoelectric (TE) heat pump system by means of exergy analysis considering internal and external irreversibilities. They developed four thermodynamic models and presented that when the temperatures for the hot and cold faces of TE are 313 K and 303 K respectively, the maximum energy and exergy efficiency obtained are 4.01 and 12.81% at same optimum current of 5.55A. They also proved that internal irreversibilities have higher impact on the system performance. Dizaji et al. [12] carried out an experimental investigation on the performance of a Peltier (TE) air-cooler. They tried to figure out the effects of various thermodynamic parameters and flow characteristics for the TE air-cooler whose hot face was cooled by water fluid flow. Çağlar [13] analysed operating conditions of a TE refrigerator. He presented that the optimum ambient temperature is 293 K and the cooling COP of the system decreases from 0.351 to 0.011 while the temperature of the cooled space changes from 293 K to 254.8 K.

Nomenclature

Abbreviations

CC	Chill compartment	g	Acceleration due to gravity (9.81 ms^{-2})
Comp	Compressor	H	Height of the compartment (mm)
COP	Coefficient of performance (WW^{-1})	H_T	Height of the TEC
Cu	Copper	k	Ratio of specific heat capacities (Wm-1°C-1)
EEC	Energy efficiency class	m	Mass flow rate
FC	Freezer compartment	Q_C	Cooling effect (W)
FFC	Fresh food compartment	$Q_{C,TEC}$	Thermoelectric cooler cooling effect (W)
HHR	Hybrid household refrigerator	Q_H	Heating effect (W)
IEC	International Electrotechnical Commission	$Q_{H,TEC}$	Thermoelectric cooler heating effect (W)
PEM	Proton exchange membrane	$\dot{Q}_J$	The rate of heat transfer
SLHX	Suction line heat exchanger	r_{we}	The waste exergy ratio
TE	Thermoelectric	T	Temperature (K)
TEC	Thermoelectric cooler	T_0	Ambient temperature (K)
VC	Vapour compression	V	Mean fluid speed
Symbols		W	Width of the compartment (mm)
A_s	Surface area (m^2)	W_T	Width of the TEC (mm)
c_p	Specific heat in constant pressure ($kJkg^{-1}°C^{-1}$)	W_i	Width of the TEC inlet (mm)
D	Depth of the compartment (mm)	$W_{comp,in}$	Compressor power (W)
D_F	Fan diameter (mm)	z	Elevation above a datum
e	Specific flow exergy	*Greek symbols*	
fexd	The exergy destruction factor	η_{II}	Second law efficiency

There are limited studies dealing with performance of domestic refrigerators cooled by TE coolers in the exergetic point of view. In present study, it is aimed to figure out the performance of a domestic TE refrigerator through exergy analysis.

2. Technical details for FFC of TE refrigerator

The TE refrigerator was built through modification of a commercial Bosch KGN39 premium refrigerator, a bottom freezer type with two doors and three compartments: *fresh food compartment (FFC) with a net volume of 175 l, chill compartment (CC) with a net volume of 81 l and freezer compartment (FC) with a net volume of 87 l*. The FFC of the refrigerator is cooled by the TEC and the rest of the compartments are cooled by VC system (See Fig.1).

The TEC, CTA305, is manufactured by Marlow with a capacity of 143 W. It was selected to meet the heat load requirements of FFC. The heat load requirements' calculations are based on the measurements of overall transmission losses and the calculations stated in the former study [14].

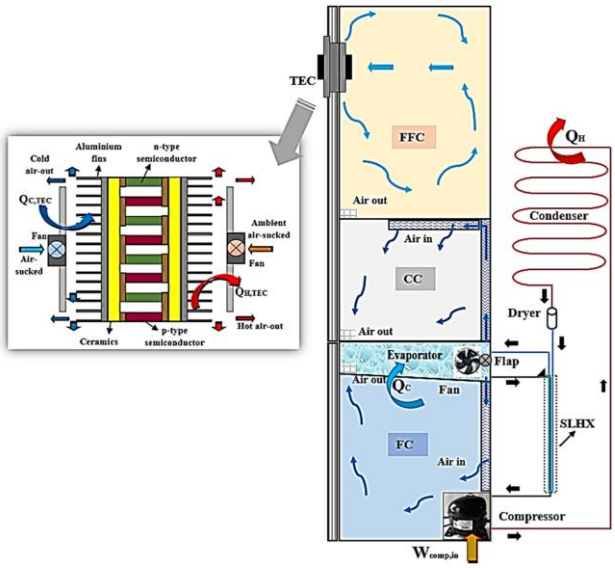

Figure 1. Domestic TE refrigerator

3. Experimental set-up and measurements

Temperature transducers used for the measurements are inserted into the centre of Cu cylinders which are solid masses made of brass or tin-covered copper having masses of 25 g ±5%. The humidity and temperature inside the chambers can be set as required. The humidity was kept between 35% and 50% during the tests. It is possible to collect temperature, pressure, mass flow and power test data at each test station inside the chambers. Test data were collected by means of data acquisitions and then transmitted to the BSH test software to analyse the results.

Quality instruments with high accuracies were used in the experiments. Power was measured with an accuracy of 0.025% by a Zimmer LMG500 power meter and energy consumption were measured with an uncertainty of less than 2%. Relative humidity had an overall uncertainty of measurement not greater than 5%. Calculated values of test duration, made up of the difference between times recorded at each sampling period, had an expanded uncertainty of 0.1%. T type calibrated thermocouples were used as temperature instruments with a measurement uncertainty of ±0.2 °C. The test data were collected by the datalogger, an Agilent 34970A.

For cooling test, the packages that consist of oxyethylmethylcellulose, sodium chloride, and water, described in the given standard [15], were used.

Dimension tolerances for the packages were ± 2 mm for small packages, ±3 mm for larger ones. The tolerances of masses of the packages were ±2%.

To measure the air velocities inside the FFC a Testo 425, thermal anemometer was used. It is well suited to low airflow velocity (0 to 20 ms^{-1}) with an accuracy of ±0.5 °C and resolution of 0.01 ms^{-1}.

4. Exergy analysis

The exergy analysis for the FFC of the so-called hybrid II refrigerator, which was studied experimentally in [14], was performed using the previously obtained experimental measurements. In reference [14], experimental analyses were performed for energy consumption and cooling capacity predictions however, an exergy analysis was not performed. In this study, the analysis is performed for the FFC only, which was cooled by the thermoelectric device described in [14]. For this purpose the interior of the FFC is taken as a control volume as shown in Fig. 2 [16]. In addition, the dimensions are given in Table 1.

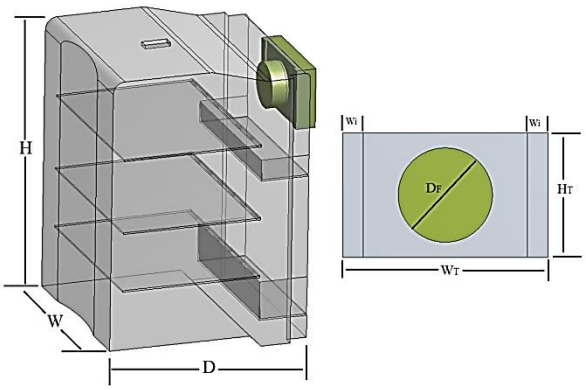

Figure 2. Fresh food compartment of TE refrigerator

Table 1. The dimensions for FFC of TE refrigerator

Dimensions	Values
FFC	
H	695 mm
W	495 mm
D	515 mm
TEC cold face	
H_T	150 mm
W_T	250 mm
Wi	30 mm
D_F	120 mm

In Fig. 3, air inlets and exits depicted for the fan of cold face of the TEC. Stations 1 and 2 are the air inlets where the TEC blows cooled air in, and station 3 is the exit from where the TEC pulls air back into itself.

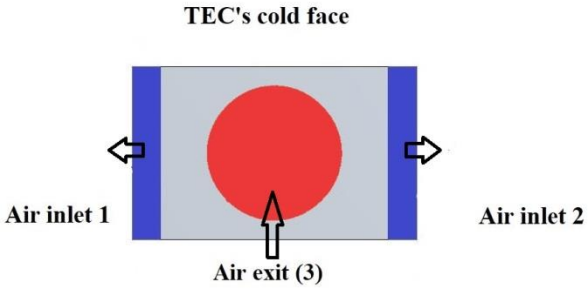

Figure 3. Air inlets and exit of TE cold face

The exergy balance for a steady flow process in a control volume is written as [17]:

$$0 = \sum_j \left(1 - \frac{T_0}{T_j}\right) \dot{Q}_j + \dot{W} + \sum_{inlet} \dot{m}\, e - \sum_{exit} \dot{m}\, e - \dot{E_d} \quad (1)$$

In equation (1) T_0 is the ambient temperature which is considered as the dead state here. $\dot{Q}_j$ is the rate of heat transfer from the boundary j, T_j is the temperature of the boundary j, $\dot{W}$ is the net rate of work produced inside the control volume, $\dot{m}$ is the mass flow rate, e is the specific flow exergy and $\dot{E_d}$ is the rate of exergy destruction due to irreversibilities [17] [18]. In this study, no machinery is operating inside the control volume; therefore, the $\dot{W}$ term is zero. In addition to this, it is also assumed that the heat transfer takes place at the mean temperature of the compartment.

The flow exergy, e, is composed of physical exergy, kinetic energy, potential exergy and chemical exergy terms [17] [18];

$$e = e_{ph} + e_{kn} + e_{pt} + e_{ch} \quad (2)$$

In the study there are no chemical reactions therefore, the last term in equation 2 is dropped. The other terms are defined as [17] [18]:

$$e_{ph} = C_p T_0 \left[\frac{T}{T_0} - 1 - ln\left(\frac{T}{T_0}\right)\right] - ln\left(\frac{p}{p_0}\right)^{\frac{k-1}{k}} \quad (3)$$

$$e_{kn} = \frac{V^2}{2} \quad (4)$$

$$e_{pt} = gz \quad (5)$$

In the above equations C_p is the specific heat capacity under constant pressure, T is temperature, p is pressure, k is the ratio of specific heat capacities, V is the mean fluid speed, g is the gravitational acceleration and z is the elevation above a datum. As mentioned before, the subscript 0 denotes dead state. In this study the variation of elevation between the inlet and the exit of the control volume is very small. Therefore, the potential exergy term is dropped. In order to calculate the physical and kinetic

exergies measurements performed at the inlet and exit stations of the TEC device. Table 2 contains mean temperature values measured at the inlet (1 and 2) and exit (3) stations along with the standard deviation values around the mean. Here, these temperature measurements were performed while the TEC device is operating.

Table 2. Temperature measurements

Station	Temperature (K)	
	Mean	Standard deviation
1	275.45	0.9504
2	275.45	0.9500
3	277.15	0.8021

The mean velocities measured at the inlet and exit stations along with the corresponding standard deviation values are displayed in Table 3.

Table 3. Air speed measurements

Station	Speed (m/s)	
	Mean	Standard deviation
1	2.23	0.7459
2	2.47	0.3817
3	1.91	0.3918

The experimental measurements were performed at an ambient temperature of T_0 = 298.15 K with a standard deviation of 0.5 K. No pressure measurements were performed during the experimental studies therefore, it was assumed that the pressure inside the FFC is equal to the ambient (or dead state) pressure. The specific flow exergies at the specified stations calculated by submitting the values in tables 2 and 3 into equations 3 and 4 are summarized in Table 4.

Table 4. Flow exergy values

Station	Flow exergy (m^2/s^2)	
	Mean	Standard deviation
1	914.5	77.61
2	917.8	73.38
3	776.5	59.96

5. Results

In this study, heat transfer takes place between the FFC and the surrounding through the FFC walls and the TEC device, and between the FFC and packages located inside the compartment [14]. In reference [14] the total heat load of the FFC was calculated to be 45 W. Here, it is assumed that all the heat transfer takes place in the FFC mean temperature, which was measured to be 277.95 K with a standard deviation of 0.7095 K.

The TEC device used for the FFC operates at a volume flow rate of approximately 2 m^3/min. There are two inlet stations therefore this flow rate is divided into two. Since both of these inlet stations have the same area, the division is performed according to the measured mean air speeds at these stations. During the calculations the air is assumed to be calorically perfect with the Cp being equal to 1004.55 J/kg.K. The air density is calculated to be 1.27 kg/m^3 using the equation state at the mean temperature at FFC and atmospheric pressure.

Submitting all these values in to equation 1, the rate of exergy destruction is calculated to be:

$$\dot{E}_d = 2.676W \tag{6}$$

The exergetic efficiency (or second law efficiency) is defined as the ratio of exergy recovered to the available exergy [3]. Since the purpose of the TEC is to cool the FFC by overcoming the heat loads, the exergetic efficiency for this problem can be defined as:

$$\eta_{II} = 1 - \frac{\dot{E}_d}{\dot{m}_1 e_1 + \dot{m}_2 e_2 - \dot{m}_3 e_3} \tag{7}$$

Using the values calculated above the exergetic efficiency is calculated to be:

$$\eta_{II} = 0.55 \tag{8}$$

This indicated that there a lot of room for improving the FFC cooling process for better energy and exergy efficiency.

In reference [19], some exergetic parameters were defined for PEM fuel cells in order to measure their environmental impact. The definitions of some of those parameters can be adapted for this study. One of those parameters mentioned in [19] was the exergy destruction factor (f_{exd}) defined as the ratio of exergy destruction to available exergy. According to this definition, the exergy destruction factor is calculated to be:

$$f_{exd} = 0.45 \tag{9}$$

Another important parameter mentioned in [19] was the waste exergy ratio (r_{we}), which is defined as the ratio of waste exergy to total exergy input. The amount of exergy leaving the control volume is considered to be waste [19] since it was not used inside the control volume for any useful work production. Therefore, for this study, this quantity can be formulated as:

$$r_{we} = \frac{\dot{m}_3 e_3}{\dot{m}_1 e_1 + \dot{m}_2 e_2} \tag{10}$$

The value of this ratio is

$$r_{we} = 0.85$$

Although this value is quite high, because the air sucked by the TEC device is cooled and blown back into the FFC, this waste can be considered reusable waste [19]. Based on this consideration the environmental destruction index,

as defined in [19], can be calculated to be 0.82. According to [19] this index changes between 0 and ∞ with smaller being the better.

6. Conclusions

One can conclude that the cooling process taking place in the FFC does not seem to adversely affect the environment. However, one must include to the exergy analysis for the TEC device including the heat transfer on the hot side of the TEC in order to reach useful conclusions. The exergetic efficiency of the system being 0.55 means that there is considerable room for improvements. Since the cooling process in the FFC largely depends on the quality of air movement inside the compartment, it was shown in [16] that optimal positioning of the TEC device provides a more effective cooling. This might also help reduce the exergy destruction and consequently increase the exergetic efficiency.

References

[1] I. Dincer and M. A. Rosen, Exergy, Energy, Environment and Sustainable Development, Elsevier, 2007.

[2] G. Grazzini and A. Rocchetti, "Thermodynamic optimization of irreversible refrigerators," *Energy Conversion and Management,* vol. 84, pp. 583-588, 2014.

[3] E. Açıkkalp, "Exergetic sustainability evaluation of irreversible Carnot," *Physica A,* vol. 436, pp. 311-320, 2015.

[4] S. Frikha and M. S. Abid, "Performance optimization of irreversible combined Carnot refrigerator based on ecological criterion," *International Journal of Refrigeration,* vol. 62, pp. 153-165, 2016.

[5] L. Chen, Y. Tu and F. Sun, "Exergetic efficiency optimization for real regenerated air refrigerators," *Applied Thermal Engineering,* vol. 31, pp. 3161-3167, 2011.

[6] M. M. Joybari, M. S. Hatamipour, A. Rahimi and F. G. Modarres, "Exergy analysis and optimization of R600a as a replacement of R134a in a domestic refrigerator system," *International Journal of Refrigeration,* vol. 36, pp. 1233-1242, 2013.

[7] Q. Chen, G. Yan and J. Yu, "Performance analysis of an ejector enhanced refrigeration cycle with R290/R600a for application in domestic refrigerator/freezers," *Applied Thermal Engineering,* vol. 120, pp. 581-592, 2017.

[8] J. Belman-Flores, V. Rangel-Hernandez, S. Uson and C. Rubio-Maya, "Energy and exergy analysis of R1234yf as drop-in replacement for R134a in a domestic refrigeration system," *Energy,* vol. 132, pp. 116-125, 2017.

[9] M. Fatouha and H. Abou-Ziyana, "Energy and exergy analysis of a household refrigerator using a ternary hydrocarbon mixture in tropical environment – Effects of refrigerant charge and capillary length," *Applied Thermal Engineering,* vol. 145, pp. 14-26, 2018.

[10] H. Zhao, T. Yuan, J. Gao, X. Wang and J. Yan, "Conventional and advanced exergy analysis of parallel and series compression-ejection hybrid refrigeration system for a household refrigerator with R290," *Energy,* vol. 166, pp. 845-861, 2019.

[11] S. Kaushik, S. Manikandan and R. Hans, "Energy and exergy analysis of thermoelectric heat pump system," *International Journal of Heat and Mass Transfer,* vol. 86, pp. 843-852, 2015.

[12] H. S. Dizaji, S. Jafarmadar, S. Khalilarya and S. Pourhedayat, "A comprehensive exergy analysis of a prototype Peltier air-cooler; experimental investigation," *Renewable Energy,* vol. 131, pp. 308-317, 2019.

[13] A. Çağlar, "Optimization of operational conditions for a thermoelectric refrigerator and its performance analysis at optimum conditions," *International Journal of Refrigeration,* vol. 96, pp. 70-77, 2018.

[14] E. Söylemez, E. Alpman and A. Onat, "Experimental analysis of hybrid household refrigerators including thermoelectric and vapour compression cooling systems," *International Journal of Refrigeration,* vol. 95, pp. 93-107, 2018.

[15] IEC-62552:2015, "IEC 62552:2015 Household Refrigerating Appliances - Characteristics and Test Methods," International Electrotechnical Commission (IEC), 2015.

[16] E. Söylemez, E. Alpman, A. Onat, Y. Yükselentürk and S. Hartomacıoğlu, "Numerical (CFD) and experimental analysis of hybrid household refrigerator including thermoelectric and vapour compression cooling systems," *International Journal of Refrigeration,* vol. 99, p. 300–315, 2019.

[17] A. Bejan, G. Tsatsaronis and M. Moran, Thermal design and optimization, New York: John Wiley & Sons, 1996.

[18] Y. A. Çengel and M. A. Boles, Thermodynamics: An Engineering Approach, New York: McGraw Hill, 2011.

[19] A. Midilli and I. Dincer, "Development of Some Exergetic Parameters for PEM Fuel Cells for Measuring Environmental Impact and Sustainabilitiy," *International Journal of Hydrojen Energy,* vol. 34, no. 9, pp. 3858-3872, 2009.

View publication stats