MARMARA UNIVERSITY
INSTITUTE FOR GRADUATE STUDIES
IN PURE AND APPLIED SCIENCES

DESIGN OF A PHOTOVOLTAIC-BASED RENEWABLE POWER SYSTEM FOR AN ELECTRICAL MACHINE LABORATORY: OPERATION AND PERFORMANCE ANALYSIS

AFIAA I.I. NANISH

MASTER THESIS

Department of Electrical-Electronics Engineering (Turkish)

Thesis Supervisor
Prof. Dr. Necibe Füsun Oyman SERTELLER

Thesis Co-Supervisor
Asst. Prof. Alper Nabi AKPOLAT

ISTANBUL, 2023

MARMARA UNIVERSITY
INSTITUTE FOR GRADUATE STUDIES
IN PURE AND APPLIED SCIENCES

DESIGN OF A PHOTOVOLTAIC-BASED RENEWABLE POWER SYSTEM FOR AN ELECTRICAL MACHINE LABORATORY: OPERATION AND PERFORMANCE ANALYSIS

AFIAA I.I. NANISH

MASTER THESIS

Department of Electrical-Electronics Engineering (Turkish)

Thesis Supervisor
Prof. Dr. Necibe Füsun Oyman SERTELLER

Thesis Co-Supervisor
Asst. Prof. Alper Nabi AKPOLAT

ISTANBUL, 2023

ACKNOWLEDGMENT

I would like to express my heartfelt gratitude to all those who supported me throughout the journey of completing this thesis.

First and foremost, I am deeply thankful to my advisor, Prof. Dr. Necibe Füsun Oyman Serteller, and Asst. Prof. Alper Nabi AKPOLAT, for their invaluable guidance, unwavering support, and insightful feedback. Their mentorship has been instrumental in shaping the direction of my research and refining my academic and research skills.

I extend my appreciation to the faculty members of the Electrical and Electronics Department for their knowledge-sharing and for providing an enriching academic environment. I am also thankful to the staff at the Marmara University library and research facilities for their assistance in accessing vital resources. I am indebted to acknowledge my family (my father, mother, and sisters) for their unwavering belief in me and constant encouragement. Their love and support have been my driving force. I must also thank my friends and colleagues for their encouragement, discussions, and moral support. Your presence made this academic journey more enjoyable.

Lastly, I am grateful to all the participants who contributed to this research, without whom this work would not have been possible.

In conclusion, I would like to express my deepest gratitude to those who have played a role, big or small, in completing this thesis. Your support has been indispensable, and I am sincerely thankful."

October 2023 **Afiaa I.I NANISH**

TABLE OF CONTENTS

PAGE

ACKNOWLEDGMENT ..... **i**

TABLE OF CONTENTS ..... **ii**

ABSTRACT ..... **iv**

ÖZET ..... **vi**

DECLARATION OF NOVELTY ..... **viii**

SYMBOLS ..... **x**

ABBREVIATIONS ..... **xii**

LIST OF FIGURES ..... **xiii**

LIST OF TABLES ..... **xvi**

1. INTRODUCTION **1**

1.1. Background and Motivation **1**

1.2. Objectives and Limitations 2

1.3. Thesis Outline .....

2. DESCRIPTION AND MODELING OF PHOTOVOLTAIC POWER SUPPLY SYSTEM FOR A MACHINE LABORATORY **6**

2.1. PV Generation 7

2.2. Power converter and its controller 9

2.2.1. DC-DC Boost Converter Basics 10

2.2.2. Maximum Power Point Tracking (MPPT) Algorithm 12

2.2.3. Three-phase Inverter 14

2.2.4. RC Filter 16

3. LOAD GROUPS **19**

3.1. DC-AC Machines in Electric Machine Laboratory 19

3.1.1. AC machines as an AC Load 19

3.1.1.1. Induction Motor 19

3.1.1.2. Three-Phase Transformer 22

3.1.1.3. Synchronous motor 25

3.1.1.4. RLC Load 27

3.1.2. DC Machines 28

3.1.2.1. DC Motor as a DC Load 28

3.1.2.2. Ohmic Load 29
3.2. Generators 30
3.2.1. DC Motor – DC Generator 30
3.2.2. DC Motor – AC Synchronous Generator 34
4. SIMULATION RESULTS AND DISCUSSION 38
5. CONCLUSION AND SUGGESTION FOR FUTURE WORKS 62
REFERENCES 65
CURRICULUM VITAE 71

ABSTRACT

Because of the enormous population growth and advancements in the industrial sectors, energy demand is rising rapidly day by day. The use of conventional non-renewable energy sources, such as coal, gas, and oil, results in an increase in carbon dioxide (CO_2) and greenhouse gases, which constitute a serious threat to the atmosphere and the ecosystem. Studies and research in recent years have concentrated on the necessity to find an alternative to these resources and to solve this problem through renewable sources (RSs), as coastal and water pollution, air pollution, and deforestation are some of the most significant negative impacts of fossil fuels. The most significant of these sources, which are the most frequently used forms of solar and wind energy, incorporate generators and energy storage systems, which lower emissions and provide power through primary and secondary networks. In many areas of life, including the social and economic sectors, energy is crucial. Even though energy resources are present in many nations, a lack of electricity is a problem in many of them. Solar energy has been deemed perfect and successful at all levels following significant attempts in recent decades to discover solutions and alternatives because it is a limitless source that does not require environmental maintenance and development. Our daily life could be powered by solar energy to an amazing extent. According to researches, the quantity of sunlight that reaches the surface of the Earth in an hour and a half is sufficient to provide all the world's energy needs for a complete year.

The private electricity sector in Nigeria, which relies on solar energy as one of the most significant sources of electricity in the nation, especially in developing regions, has carried out this. During the hours of sunrise, solar energy can be used to meet our daily energy needs. During the hours of darkness, when there is no sunlight, extra storage devices are employed to meet demand. Although energy production takes place throughout the day in Denmark, consumer consumption is focused at night, when a major portion of the energy is sold rather than consumed by households directly. Saudi Arabia decided that 30% of the energy produced in the Kingdom of Saudi Arabia in 2030 must come from a variety of RSs, based on wind, geothermal, and solar photovoltaic (PV) energy. This decision was made in collaboration with key corporations and the Saudi Energy Efficiency Authority. As a result, the widespread use of these resources has many benefits, the most significant of which is the ability to manage system demand, meet needs, and provide as much energy as possible, increasing the materials' dependability and effectiveness as well as their impact on the economy and enabling the receipt of numerous incentives and tax exemptions. These materials have recently been upgraded, enhanced artistic

performance, and changed into intelligent networks, which offer a variety of services such as effort regulation, frequency regulation, and electrical system stability regulation.

In this context, the design, modeling, implementation, and operation of a PV grid system have all been covered in this thesis study. This system is proposed as a source aimed at generating electricity for a collection of loads equivalent to the design of 25 kilowatts, also which is thought to be the most promising way to save money.

When the maximum production capacity is reached and the electricity that creates the maximum production capacity is consumed, the solar PV plant is connected to the grid as a solar PV plant to meet the demand for electricity. Evaluating a solar PV system's potential is one of the goals of this essay. Additionally, this study attempts to supply the laboratory with the maximum proportion of energy at the lowest costs and with the best efficiency possible. The basic objective is to use solar energy primarily in our daily lives. We expanded this analysis with electric generators that function to cover the deficiency, though, in anticipation of future issues or to prevent a supply constraint. Additionally, the MATLAB/Simulink environment has been used to build the modeling of the overall system. It can be extracted by the obtained results that the overall system performs pretty well to feed the defined load groups in machine laboratory smoothly.

October 2023 **Afiaa I.I. NANISH**

ÖZET

Büyük nüfus artışı ve endüstriyel sektörlerdeki ilerlemeler nedeniyle enerji talebi her geçen gün hızla arttığından, kömür, gaz ve petrol gibi geleneksel yenilenemeyen enerji kaynaklarının kullanımı, karbon dioksit (CO_2) ve sera gazlarının artmasına neden olur, bu da atmosfer ve ekosisteme için ciddi bir tehdit oluşturur. Son yıllardaki çalışmalar ve araştırmalar, bu kaynakların alternatifini bulma ve fosil yakıtların en önemli olumsuz etkilerinden biri olan kıyı ve su kirliliği, hava kirliliği ve orman tahribatı gibi sorunları yenilenebilir kaynaklar (YK'lar) aracılığıyla çözme gerekliliğine odaklanmıştır. Bu kaynakların en önemlilerinden biri, en yaygın kullanılan Güneş ve Rüzgar enerjisi formları olup, emisyonları azaltan ve birincil ve ikincil ağlar aracılığıyla enerji sağlayan jeneratörler ve enerji depolama sistemlerini içerir. Sosyal ve ekonomik sektörler de dahil olmak üzere birçok yaşam alanında enerji önemlidir. Enerji kaynakları birçok ülkede bulunsa da birçok ülkede elektrik eksikliği yaşanmaktadır. Güneş enerjisi, çevresel bakım ve geliştirme gerektirmeyen sınırsız bir kaynak olduğu için son yıllarda önemli çabaların ardından tüm seviyelerde mükemmel ve başarılı olarak kabul edilmiştir.
Araştırmalara göre, Dünya'nın yüzeyine bir buçuk saat boyunca ulaşan güneş ışığının miktarı, tüm dünyanın bir yıllık enerji ihtiyaçlarını karşılamak için yeterlidir.

Özellikle gelişmekte olan ülkelerde, örneğin Nijerya'da en önemli elektrik kaynaklarından biri güneş enerjisine dayanmaktadır. Güneş enerjisi, günün her saatinde günlük enerji ihtiyaçlarımızı karşılamak için kullanılabilir. Güneş ışığı olmadığı saatlerde, talebi karşılamak için ek depolama cihazları kullanılır. Danimarka'da enerji üretimi gün boyunca gerçekleşse de tüketici tüketimi geceye odaklanır ve enerjinin büyük bir kısmı doğrudan evler tarafından tüketilmez, satılır. Suudi Arabistan, 2030 yılında Suudi Arabistan Krallığı'nda üretilen enerjinin %30'unun çeşitli YK'lerden gelmesi gerektiğine karar verdi ve bu nedenle rüzgar, jeotermal ve güneş fotovoltaik (PV) enerji kullanılmasını desteklemektedir. Bu karar, önemli kuruluşlar ve Suudi Enerji Verimliliği Otoritesi ile işbirliği içinde alınmıştır. Bu nedenle bu kaynakların yaygın kullanımının birçok faydası bulunmaktadır, en önemlisi sistem talebini yönetme, ihtiyaçları karşılama ve malzemelerin güvenilirliğini ve etkinliğini artırma yeteneğidir ve ekonomi üzerindeki etkilerini artırır ve birçok teşvik ve vergi muafiyeti alınmasını sağlar. Bu malzemeler son zamanlarda güncellenmiş, sanatsal performansları artırılmış ve akıllı ağlara dönüştürülmüştür ve çaba düzenleme, frekans düzenleme ve elektrik sistem stabilite düzenleme gibi çeşitli hizmetler sunar.

Bu kapsamda, tez çalışmasında bir PV şebeke sisteminin tasarımı, modellemesi, uygulanması

ve işletmesi ele alınmıştır. Bu sistem, 25 kilowatt tasarımına eşdeğer yükler için elektrik üretmeyi amaçlayan bir kaynak olarak önerilmiş ve be şekilde elektrik tüketiminde büyük tasarruf yapılacağı düşünülmüştür. Maksimum üretim kapasitesine ulaşıldığında ve maksimum üretim kapasitesi yaratan elektrik tüketildiğinde, güneş PV santrali elektrik talebini karşılamak için bir PV santrali olarak şebekeye bağlanır. Bu makalenin amaçlarından biri bir güneş PV sisteminin potansiyelini değerlendirmektir. Ayrıca, bu çalışma laboratuvara en yüksek oranda enerji sağlama ve en düşük maliyetle ve en iyi verimlilikle sağlama amacı taşır. Temel amaç güneş enerjisini günlük yaşamımızda başlıca kullanmaktır. Bu analizi, gelecekteki sorunlara karşı hazırlık veya arz sıkışıklığını önlemek amacıyla eksikliği kapatmak için işlev gösteren elektrik jeneratörleriyle genişlettik. Ayrıca, genel sistemin modellemesini oluşturmak için MATLAB/Simulink ortamı kullanılmıştır. Elde edilen bulgulardan çıkarılabilir ki; makine laboratuvarındaki belirli yükleri sorunsuzca beslemek adına sistem gayet iyi bir performans göstermektedir.

Ekim 2023 **Afiaa I.I. NANISH**

DECLARATION OF NOVELTY

To meet the objectives and requirements of making this study of designing a renewable PV system for a machine laboratory we have to mention several significant and novel contributions as follows:

1. The primary novelty lies in the customization of the renewable PV system to meet the specific energy requirements and operational characteristics of machine laboratories. Unlike generic solar system designs, this study considers the unique electrical loads and equipment present in machine laboratories, such as heavy machinery, motors, and specialized equipment. The system's design is optimized to accommodate the laboratory's energy demands and ensure a reliable and efficient power supply.

2. Integration of Advanced Energy Monitoring and Control Systems: An additional novel aspect is the integration of advanced energy monitoring and control systems within the renewable PV system design. This allows for real-time monitoring of energy production, consumption, and system performance. By implementing an intelligent controller which is Maximum Power Point Tracking (MPPT) Implementation, MPPT techniques enable efficient extraction of maximum power from the solar panels (SP) by dynamically adjusting the operating voltage and current to match the varying environmental conditions and panel characteristics. This customization ensures optimal energy harvesting, improving the overall system performance and energy utilization in the machine laboratory.

3. Mitigation of Power Fluctuations and Load Variability: Machine laboratories often experience significant power fluctuations and load variability due to the intermittent operation of machinery and varying energy demands. This study focuses on novel techniques for mitigating these challenges within the renewable PV system design. Special attention is given to incorporating energy storage solutions, such as battery supercapacitors or, to ensure a stable and uninterrupted power supply, even during periods of low solar energy generation or sudden load spikes.

4. Optimization for Cost-effectiveness and Environmental Impact: A crucial contribution of this research study lies in the optimization of the renewable PV system for cost-effectiveness and environmental impact. Advanced modeling and simulation techniques are employed to evaluate various system configurations, including solar panel types, battery capacities, and inverter technologies, to identify the most economically viable and environmentally sustainable design options. This optimization ensures a balanced approach, considering the

initial investment, payback period, energy efficiency, and greenhouse gas emissions reduction, resulting in a cost-effective and environmentally friendly renewable energy solution.

October 2023

Prof. Dr. Necibe Füsun Oyman SERTELLER **Asst. Prof. Alper Nabi AKPOLAT**

Afiaa I. I. NANISH

SYMBOLS

CO_2 **:** Carbon dioxide

RSs **:** Renewable sources

PV **:** Photovoltaic

RSE **:** Renewable solar energy

SP **:** Solar panels

PE **:** Peak efficiency

EMF **:** Electromotive force

Ns **:** Number of turns in the secondery windings

Np **:** Number of turns in the primary winding

t **:** Time (sec-min)

V_{mp} **:** Voltage at maximum power

T **:** Temperature (°C)

I_{mp} **:** Current at maximum power

G **:** Reference Solar Irradiance (W/m^2)

f_{cs} **:** Switching frequency (Hz)

D **:** Duty cycle

L_{bs} **:** Inductance (H)

C_{bs1} **:** Capacitance (F)

R_s **:** Snubber resistance (Ω)

C_s **:** Snubber capacitance (F)

C_{bs2} **:** Resistance (Ω)

L **:** Boost Converter Inductor (H)

I_D **:** Diode Current (A)

P_m **:** Mechanical Output Power (W)

T_e **:** Electromagnetic Torque (N.m)

V_{nom_prim} **:** Nominal inverter primary line-to-line voltage (V)

P_{nom} : Inverter nominal 3-phase power (VA)

N_p : Number of bridge arms

V_{nom_dc} : Nominal DC link voltage

R_{on} : conduction resistance (Ω)

V_f : Forward voltage (V)

V_{fd} : Diode Forward voltage (V)

F_c : Cutoff frequency (Hz)

I_o : Output current (A)

η : Efficiency (%)

ω : The Rotor Electrical Angular Speed (rad/sec)

φ : The Permanent Magnetic Flux (V.m)

I_f : Field current (A)

I_a : Armature current (A)

ABBREVIATIONS

AC : Alternating Current

EMS : Energy Management System

DER **:** Distributed Energy Resources

DC **:** Direct Current

DG **:** Distributed Generation

GPU **:** Graphical Processing Unit

MPP **:** Maximum Power Point

MPPT **:** Maximum Power Point Tracking

PCC **:** Point of Common Coupling

PI **:** Proportional Integral

PID **:** Proportional Integral Derivative

PLL **:** Phase Locked Loop

FLC : Fuzzy logic controller

PV : Photovoltaic

PWM : Pulse Width Modulation

P&O **:** Perturb and Observe

RES **:** Renewable Energy Source

RE **:** Renewable Energy

SSD **:** Solid State Drive

STC **:** Standard Test Conditions

SM **:** Synchronous Motor

THD **:** Total Harmonic Distortion

IGBT : The Insulated Gate Bipolar Transistors

EMI : Electromagnetic interference

ESI : Energy Storage Integration

IM : Induction motor

LIST OF FIGURES

Figure 1.1 Renewable solar system of the future 4

Figure 1.2 Thesis structure 5

Figure 2.1 Block diagram of the system 7

Figure 2.2 Effect of temperature on the solar panel 8

Figure 2.3 Effect of solar radiation on the solar panel 9

Figure 2.4 Connections between PV panels and the controller 10

Figure 2.5 DC-DC Boost Converter electrical circuit 11

Figure 2.6 DC-DC boost converter VDC regulator 13

Figure 2.7 Power-Voltage of (P&O) MPPT algorithm curve 13

Figure 2.8 Control part of three-phase electric machines 15

Figure 2.9 A three-phase IGBT inverter connected with a DC bus 16

Figure 3.1 Construction and main part of the IM 20

Figure 3.2 Transformer diagram with parts 24

Figure 3.3 Schematic diagram of a three-phase synchronous machine 25

Figure 3.4 Simulation for DC Motor 29

Figure 3.5 DC motor (a)worked out by DC generator(b) in a closed loop 31

Figure 3.6 Equivalent circuit of the DC motor which drives the DC generator 32

Figure 3.7 Schematic diagram of a three-phase synchronous Generator 34

Figure 3.8 DC motor (a) driven AC synchronous generator equivalent circuit (b) 35

Figure 3.9 MATLAB implementation of DC motor driven(a) AC synchronous generator (b). 36

Figure 4.1 Simulation of the proposed system 38

Figure 4.2 (a) Solar irradiance; (b): Temperature; (c): Vdc mean; (d): PV Power 39

Figure 4.3 (a) PV voltage; (b): PV current 39

Figure 4.4 (a) (V-I) and (b) (V-P) Curves of the system at STC 40

Figure 4.5 Block diagram of P&O MPPT algorithm and DC-DC Converter 41

Figure 4.6 Simulation of P&O MPPT algorithm 41

Figure 4.7 Boost Converter and DC-Bus voltages curve 42

Figure 4.8 The maximum output power of the generation system.....42

Figure 4.9 Simulation of the DC-AC three-phase inverter 43

Figure 4.10 Simulation of the inverter control 44

Figure 4.11 Phase a to phase b output voltage of the inverter.....45

Figure 4.12 Phase a to b phase voltage after adding machines 45

Figure 4.13 Voltage and Current behavior for the AC Bus.....46

Figure 4.14 Three-phase transformer voltage response 47

Figure 4.15 Total harmonic distortion of source for RC filter 47

Figure 4.16 Simulation of IM.....48

Figure 4.17 Speed and Torque of the IM 49

Figure 4.18 Step resistance starter simulation.....49

Figure 4.19 Simulation graph of SM.....51

Figure 4.20 Speed and Torque behavior of SM in the system 51

Figure 4.21 Speed and Torque behavior of DC motor in the system.....52

Figure 4.22 Voltage and Current of DC motor graph 52

Figure 4.23 Current of DC motor and DC generator 53

Figure 4.24 Voltage Behavior of DC motor and DC generator 53

Figure 4.25 Speed response of DC motor and DC generator.....54

Figure 4.26 Torque of DC motor and DC generator 54

Figure 4.27 Simulation of DC motor and AC synchronous generator.....55

Figure 4.28 Speed response of DC motor and AC synchronous generator.....56

Figure 4.29 Voltage and Current behavior of AC synchronous generato**r** 56

Figure 4.30 Output power of AC synchronous generator 57

Figure 4.31 Torque response of DC motor and AC synchronous generator.....58

Figure 4.32 Changes in PV power and voltage as a result of changes in solar radiation 59

Figure 4.33 Changes in MPPT and Boost Converter Voltage as a result of changes in solar radiation.....60

Figure 4.34 The changes in DC Motor Voltage and current.....60

Figure 4.35 The changes in DC Motor Speed and Torque.....61

LIST OF TABLES

Table 2.1 Specification of photovoltaic panel 7

Table 2.2 The parameters of the proposed DC-DC Boost converter..... 12

Table 2.3 A Simulink model of the three-phase inverter 15

Table 3.1 Specifications of the IM at rated state 22

Table 3.2 Specifications of the selected Three-Phase Transformer 23

Table 3.3 Specifications of the selected SM..... 26

Table 3.4 Specifications of this system DC Machine and DC Generator 33

Table 3.5 Specifications of DC Motor and AC Synchronous Generator 37

Table 4.1 Values of step time and the starter stage resistance 50

1. INTRODUCTION

This section briefly explains the background and motivation, objectives and limitations, and lastly the outline of this thesis study.

1.1. Background and Motivation

The depletion of fossil fuel resources and the harmful environmental effects of their extraction and burning have become increasingly of concern to people all over the world in recent years [1]. Due to this, the need for sustainable and RSs of energy has grown in importance, and renewable energy has drawn more attention and has emerged as the best solution to energy issues and a shortage of resources. As the development of renewable energy options helps cities thrive by lowering electricity costs, saving money, eliminating excess taxes, as well as reducing pollution, and preserving the environment [2] many nations are making efforts to develop themselves to make their energy sources more sustainable and environmentally aware [3].

Wind turbines and solar electricity are two of the many renewable energy choices that have lately come into existence. PV technology has emerged as a promising method for producing clean and renewable electricity using PV systems, also known as solar power systems [4], solar light energy to convert solar radiation directly into electricity. As the cost of having such capacity has decreased, the capacity of PV power technology has increased from 31 GW in 2012 to 39 GW in 2013, at the same time as the price of having such capacity decreased [5]. PV cells, which are frequently constructed of semiconductor materials like silicone, are used to do this.

These cells use the PV effect to produce electric currents when exposed to sunlight, which enables the production of useful electricity [6]. The electricity grid using renewable energy, however, faces many difficulties: Variations in renewable energy are frequently brought on by variations in solar radiation and wind speed [7]. These variations also frequently result in fringe modification, change of effort, and excess energy. The use of renewable energy has been supported by government regulations that favor technological advancements, cheap costs, and tremendous expansion in the worldwide PV industry in recent years. The PV systems have a wide range of uses, from rooftops to massive solar power plants, offering a sustainable and environmentally friendly alternative to the current electrical grid [8]. The benefits of PV systems are multifaceted. First, it provides a renewable energy source that can significantly reduce greenhouse gas emissions, thus contributing to climate change mitigation.

In addition, solar energy is abundant and widely available, making it a viable option for areas with limited access to conventional energy sources [9]. Electrical systems also provide energy independence and flexibility, allowing local energy generation and reducing reliance on central energy networks [10]. However, non-linear generation swings with climate change and solar energy, so the PV panel's operation point no longer overlaps with the maximum potential [11], which is why control units have been used to obtain as much energy as possible, taking into account weather changes, time changes and the amount of solar radiation, so recently the (MPPT) control unit has received the attention of researchers and has developed strategies in terms of enhancing actual energy production [12]. Currently, the MPPT algorithm is considered the most critical improvement in power generators, which rely on the use of maximum operating point and rely on traditional control methods and control approaches, Conventional MPPT control approaches involve a perturbing observe approach [13], a proportional-integral (PI) controller [14], and fuzzy logic controller(FLC) [15], This thesis was presented by a grid-connected PV system, which is a more cost-effective alternative than an off-grid system. When comparing the grid-connected system with the off-grid system, the grid-connected PV systems have 99% of the installed capacity [16]. The system consists of PV panels that convert solar energy into direct current (DC), and by activating the MPPT algorithm, the maximum possible energy is produced, then it enters a DC-DC boost converter. The system also consists of an inverter that converts electricity from DC to alternating current AC and then to the electrical grid [17].

1.2. Objectives and Limitations

In this project, the design of a solar system for the electric machine laboratory requires a detailed study of laboratory energy requirements and available space, as well as an assessment of the laboratory’s energy needs, such as the identification of loads and electrical equipment to be operated by the solar system, including machinery, lighting, ventilation systems, and any other electrical devices, the determination of their power rates (Watt or KW) and the estimation of total energy consumption (kWh) per day or month. The design of the system also requires analysis of historical solar radiation data, consideration of shading factors (such as nearby buildings or trees), and determination of the direction and angle of the solar panel’s slope for optimal exposure to sunlight. This assessment helps to estimate the potential power generation of the solar system, determine the size of the system and the number of SP needed to generate the required amount of electricity, and requires consideration of research and compliance with

local regulations, permits, and incentives for solar power installations. We must not forget that the design of the renewable solar system of the machine laboratory must be tailored to the specific requirements of the laboratory and available resources.

Solar power is obtained through a pulmonary material that generates an electrical effort when exposed to light, where power from the sun is used to heat a working liquid in the generation cycle, where solar radiate is a light that is released from the Sun and reaches the surface of the Earth in different quantities from a site, and so solar energy techniques that use these emissions are captured and transformed into useful forms of energy. As it is known, the energy from the sun is camouflaged in photons, these photons hit SP and are absorbed by semiconductor materials such as silicon, and the negative charges are separated from their atoms and flow through silicon, and the positive charges are called supplementary charges flow in the opposite direction in the silicon panel, during this process, RSs cells transform electricity. So, based on the many advantages of increasing efficiency and energy storage developments with the growth of demand for renewable energy, particularly the integration of smart networks that allow for better energy management, including the ability to achieve a dynamic balance of supply and demand, we await a promising future for these energy systems. Recently, transportation has been modernized to become solar energy with the development of solar-powered electric vehicles, as well as the provision of electricity to disadvantaged areas through the design of small grids and off-grid solutions, all these advantages, dramatic developments, and trends suggest promising future for renewable solar energy RSs systems in Figure [1.1].

This study aims at several goals, the most important of which is to build a complete and integrated system with higher efficiency and effectiveness when applied to electric machinery. Achieving this goal begins with the selection of (SP) used in the project. Solar panel technology continues to progress with a focus on improving efficiency and performance. New materials are being researched and developed, such as perovskite-based solar cells, which have the potential to achieve higher conversion efficiencies and lower manufacturing costs. An example of these panels is what was used in our project: The Sun Power SPR 315E-WHT-D. This study aims to achieve the maximum Current capacity regardless of the weather conditions and the amount of solar radiation. This presented the biggest challenge we faced, as a one-way DC-DC boost converter was used.

The converter mainly extracts the maximum power from the PV system connected via MPPT technology through which the maximum possible power is obtained with the lowest harmonics and high stability. In addition, the DC- DC converter and MPPT control the current and voltage through continuous monitoring of the output and modification of the converter parameters to

maintain the levels required to achieve optimal performance and maximum energy extraction. The study also aims to calculate the electrical loads and the amount of energy needed to fulfill the demand of the electric machine laboratory. This involves transferring a constant amount of energy to these loads through a three-phase inverter. The inverter's power generation or regulation is facilitated by a DC-DC converter, and it's connected to AC loads or the electric grid. This is crucial because not only DC machines operate, but also AC machines. The primary goal is to convert DC power into high-quality AC power, regulate voltage and frequency, and ensure the efficient and reliable operation of the connected loads.

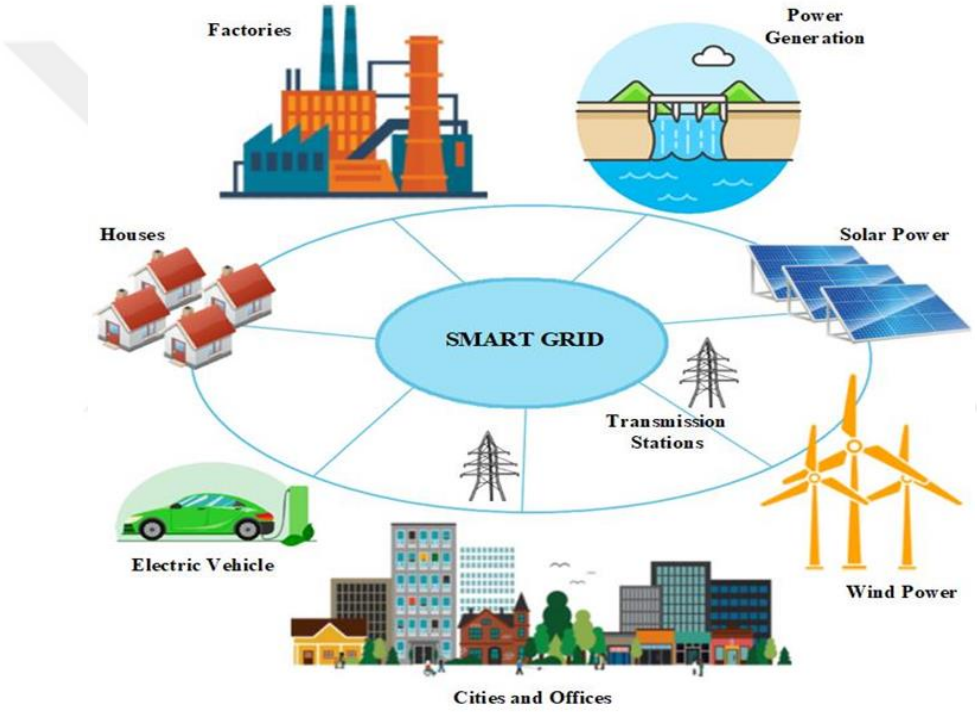

Figure 1.1. Renewable solar system of the future.

1.3. Thesis Outline

Summary of expected final outputs for master's degree. The project was mentioned in the thesis study. The thesis study consists of publications written during the project. The thesis structure may be aligned with five main sections as shown in figure 1.

The introduction to the thesis is explained in section 1. In section 2, a description and design are provided for the sun cell section and panels used, as well as for the typed generation used, the power-control device, and how to produce the most potential using the DC-DC boost Converter with an MPPT controller, after that, Structure of this thesis gives an explanation for

the calculations of the loads used for the lab, as well as to use generators, which would be an opportunity plan to solve the problem of powerlessness if there are any sudden power cuts or a glitch in the sniff system. The practical part is presented through the MATLAB and Codes software as well and the results of the project and discussed in section 4. In the end, discussions and suggestions for future work are noted in section 5.

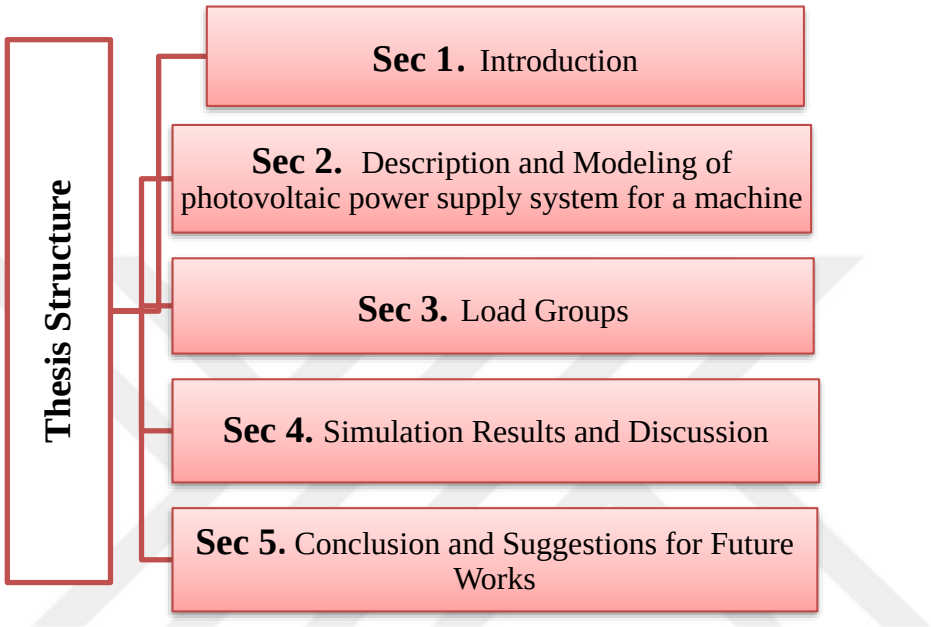

Figure 1.2. Thesis structure.

2. DESCRIPTION AND MODELING OF PHOTOVOLTAIC POWER SUPPLY SYSTEM FOR A MACHINE LABORATORY

To produce renewable energy, which is required to meet a country's energy needs, solar PV technology is crucial. This technology is clean and environmentally benign. Understanding the behavior and characteristics of the PV system in the local climate is aided by modeling, simulating, and analyzing the PV generator before installing a solar PV system anywhere. Within this context, a detailed, step-by-step simulation conducted in a MATLAB/Simulink environment is presented with a model of a solar PV module with a single-diode equivalent circuit. An extensive understanding of a solar PV module's I-V and P-V graph is provided to scholars, manufacturers, and social communities. The results of the PV module simulation are verified using the manufacturer data sheet for the JAP6-72-320/4BB module, and it was found that the largest relative error percentage was 1.65%. This suggests that the simulation results and the manufacturer's values agree quite well. Furthermore, there are positive results for the PV module's performance with real metrological data (temperature and irradiance). Additionally, it is regarded as a trustworthy method for evaluating the effectiveness of any solar PV module.

A solar power system is an excellent option for powering a machine laboratory since it functions by collecting solar energy and transforming it into DC electricity.

This study uses a control element called Maximum Power Point Tracking (MPPT) for a PV system. The observation that a solar panel's power output fluctuates due to changing environmental parameters including temperature, shading, and sunshine intensity is the basis of an MPPT's operational theory. Generally speaking, a solar system works by collecting solar energy and converting it into electrical power that powers our machine lab.

MATLAB software is used to simulate these elements, which include the size of the SP, the amount of sunshine received, and the efficiency of the system's components, to determine how much power will be produced by the system. The system under consideration is depicted in a block diagram in Figure 2.1.

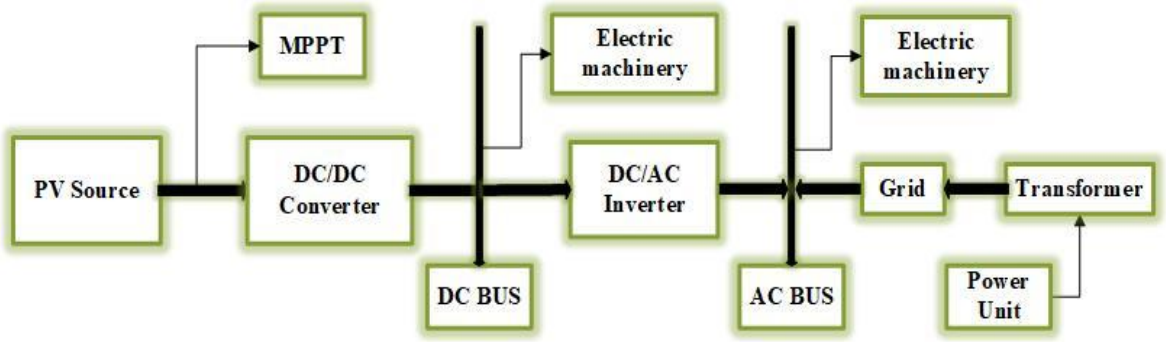

Figure 2.1. Block diagram of the system.

2.1. PV Generation

PV generating, also known as photovoltaic generation, is the process of directly converting sunlight into energy by using solar panels or photovoltaic cells. PV generation is a form of renewable energy that has surged in popularity recently because of its environmental benefits and falling costs.

So how does PV generation work:

The power generation system consists of a group of interconnected parts; Solar panels are made up of several PVs. There are two types of solar cells: mono-blurry and multi-crystal, and in our project, solar cells with poly-crystal technology have been employed where they are appropriate. These cells are typically composed of silicon and have semi-conductive qualities that enable them to convert sunlight into electricity. The most economical and versatile solution is provided by multi-color SP because they are simpler to make. These tablets come in a variety of sizes and hues and are appropriate for both small- and large-scale constructions, as well as applications inside and outside of the network. The datasheet for the Sun Power SPR 315E-WHT-D cells utilized in this project, which has 80 modules, is shown in Table 2.1. 4 series connected units for each series and 20 series parallel. Each unit has a maximum strength of 315 W, corresponding to a voltage value of 54.7 V and a current value of 5.76 A.1. The maximum array power is 25 KW with a maximum voltage of 218.8 V and a maximum current of 115.2 A.

Table 2.1. Specification of photovoltaic panel.

DC Electrical Characteristics	Value
Module type	Sun Power SPR 315E-WHT-D
STC Power Rating	315W
V_{mp}	54.7V
I_{mp}	5.76A
PE	19.3%

The intensity of solar radiation, temperature, wind speed, and humidity are the most significant environmental factors that have a significant impact on the performance and productivity of the solar panel. As a result, it is crucial to consider these factors and the extent to which they affect the panel's productivity when deciding how much power will be generated; in this case, the electrical values of the PV panel under consideration.

a. Temperature effect

The temperature has a negative impact on the voltage we receive from the solar panel; specifically, as the temperature rises, the voltage of the panel declines noticeably and sharply, while the temperature-current relationship marginally strengthens.

All of the aforementioned factors cause the solar panel's solar cells' efficiency to drop. The solar panel's response to temperature is depicted in the following figure:

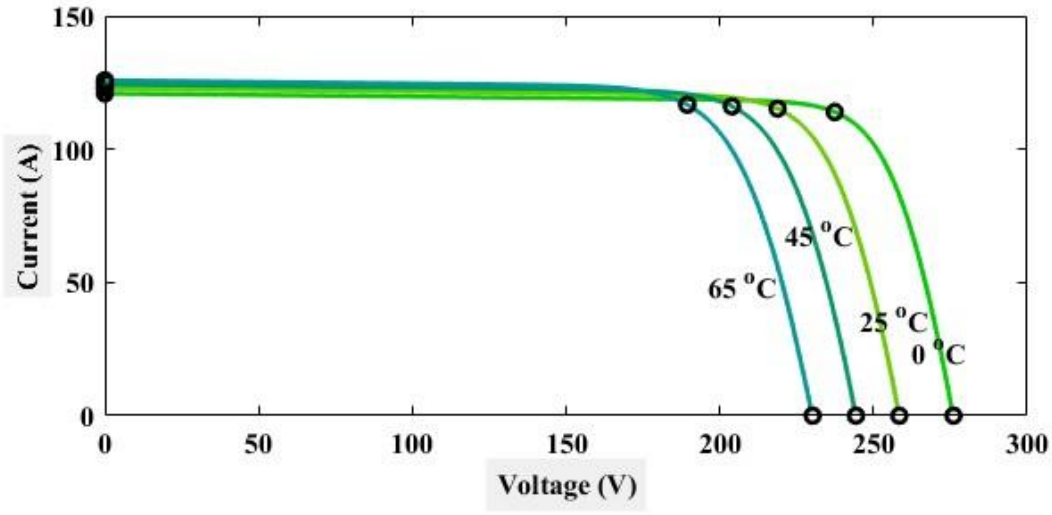

Figure 2.2. Effect of temperature on the solar panel.

b. Amount of solar radiation

The solar panel's surface is clearly affected by the amount of solar radiation that reaches it; conversely, the current flowing out of the panel is impacted by the amount of incoming solar radiation that decreases relatively significantly, either due to differences in the sun's elevation angle or clouds and other objects that block the sun's rays from the panel. As a result, the location of the panel's installation must be carefully considered, keeping it away from any factors that could cast shadows [18]. The curve that is attached illustrates the link between the panel's surface solar radiation and the current that exits it.

Therefore, to invest in SP with the most efficiency, they must operate at their full capacity. This

is accomplished by using specialized techniques known as "MPPT," which will be explained later, to reach the operating point in the maximum capacity region of the panel.

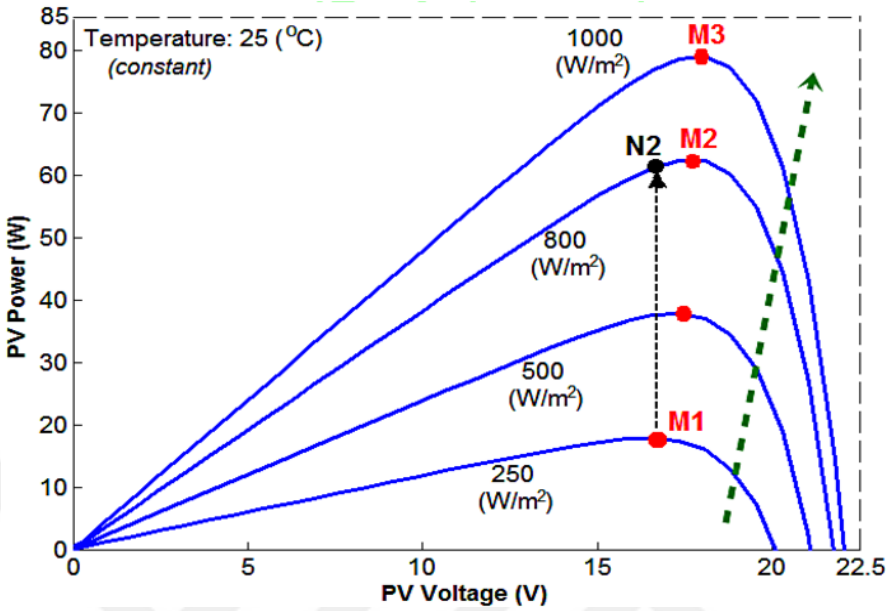

Figure 2.3: Effect of solar radiation on the solar panel [18].

2.2. Power converter and its controller

Controlling the current and voltage of solar cells is thought to be a crucial component for reaching the maximum electrical capacity possible despite external environmental variables and influences. In order to achieve the greatest power and hence increase the efficiency of the solar cells, the MPPT algorithm is employed in conjunction with the DC-DC converter, which is regarded as a fundamental control tool. The solar system keeps running to reach the power point tracking (MPPT) PV system's maximum power point (MPP), which allows the system to generate the most energy while maximizing generation capacities [19]. Therefore, a PV system's DC-DC converter and (MPPT) algorithm cooperate to maximize power production and optimize energy conversion.

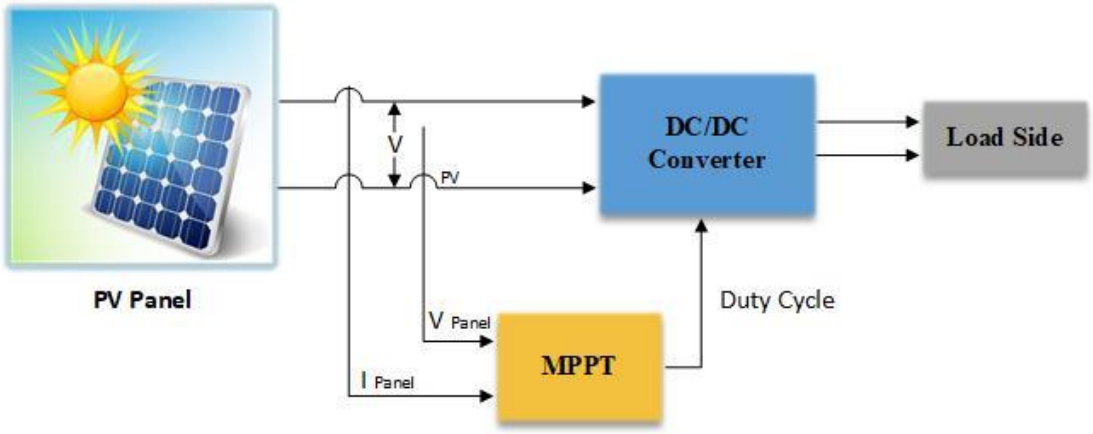

Figure 2.4. Connections between PV panels and the controller.

2.2.1. DC-DC Boost Converter Basics

An energy storage system or linked load may not be able to use the DC electricity produced by SP in a PV system because it is normally at a voltage and current level that is insufficient. The DC-DC converter is in charge of altering the voltage of the DC electricity generated. DC-DC converters of the buck, boost, and buck-boost varieties are frequently employed in PV systems [20]. In this investigation, a boost converter was employed to link the PV and energy storage systems with the host grid to make room for them. It can therefore be operated for PV at its MPP and at its highest efficiency. Boost converters are a subset of DC-DC converters that increase the input voltage to produce a greater output voltage [21].

It is frequently employed in a variety of settings, such as PS, PV systems, and battery charging. An input voltage source (such as a PV panel or battery), a power switch (often a transistor), an inductor, a diode, a capacitor, and a control circuit are the basic components of a boost converter. The electrical circuit of the boost converter is shown in Figure 2.4.

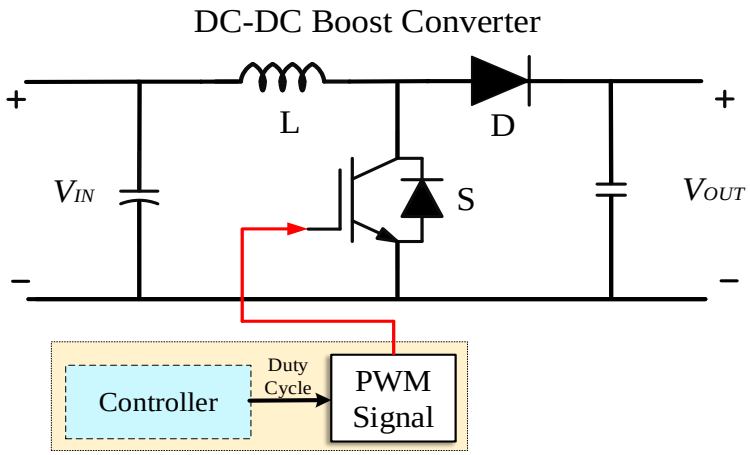

Figure 2.5. DC-DC Boost Converter electrical circuit.

A pulse width modulation (PWM) signal produced by the control circuit controls the power switch, which was implemented using a diode and the insulated gate bipolar transistors (IGBT) in the boost converter. The switch rapidly turns on and off at a high frequency (usually tens or hundreds of kilohertz KHz, even though the average current from the output is smaller than the average current from an inductor and a substantially higher RMS current flows through the capacitor used for filtering. When the power switch IGBT is turned on, current flows from the input voltage source via the inductor, storing energy in its magnetic field. The output voltage across the inductor is less than the intended output voltage at this time.

The inductor releases the accumulated energy when the power switch IGBT shuts off. When the output load is linked in parallel with a diode, the current can pass through the load without returning to the inductor. The voltage across the output capacitor rises as a result of the energy being transferred from the inductor discharge. A higher output voltage than input voltage is the effect of this. The duty cycle (D) of the PWM signal controlling the power switch is changed to modulate the output voltage [22].

In other words, when an IGBT switch is in use, the average voltage across the switch is determined by the D. As shown in equations 2.1 and 2.2, a boost converter was used in this study to increase the output voltage of the PV system to a level suitable for a DC-to-AC inverter that was connected to the grid [23].

$$D = 1 - \frac{V_{in}}{V_{out}} \tag{2.1}$$

Where V_{in} is the input voltage, V_{out} is the output voltage, $and\ D$ is the duty cycle (Hz).

$$C = \frac{I_0\ D}{f_{cs}\ \Delta V} \tag{2.2}$$

Where C is the Capacity (F) , I_o is the output current (A), f_{cs} is the switching frequency, and D is the duty cycle (Hz), ΔV is the difference between output and input voltage (V).
Here Table 2.2. shows the parameters of the proposed DC-DC Boost converter in our system

Table 2.2. The parameters of the proposed DC-DC Boost converter.

Parameter	Operating Value
f_{cs}	50 kHz
D	0.2
Input DC voltage	220 V
L_{bs}	7 mH
C_{bs1}	1 mF
C_{bs2}	2100 μΩ
R_s	500 Ω
C_s	0.250 μF

2.2.2. Maximum Power Point Tracking (MPPT) Algorithm

The voltage-current (V-I) curve of the solar panel is tracked and its MPP is determined using the MPPT algorithm [24]. The maximum power output point (MPP) of a solar panel is the operational point at which the panel produces its maximum power output under specific environmental circumstances, such as temperature and sun irradiation. The MPPT algorithm maintains the PV system operating at or near the MPP by adjusting the output voltage and current in communication with the DC-DC converter.
The MPPT algorithm provides control signals to the DC-DC converter, instructing it to raise or lower the output voltage level as required. There are two types of common MPPT algorithms for PV applications that are easy to implement Perturb and Observe (P & O) Incremental Conductance (Inc. Con.) and here in our study (P & O) algorithms have been implemented.

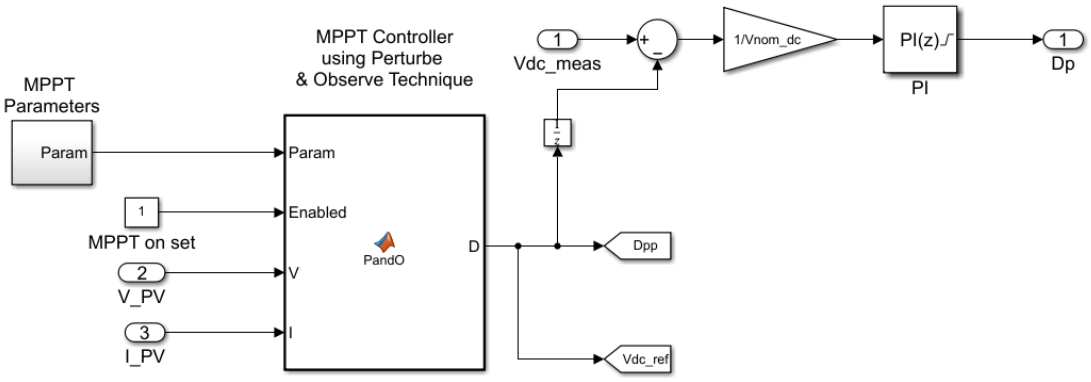

Figure 2.6. DC-DC boost converter VDC regulator.

By tracking and adjusting the operating point to the MPP as shown in Figure 2.7, the MPPT algorithm ensures that the PV system is operating at its highest possible efficiency and generating the maximum power output for the given environmental conditions [25]. regarding the previous studies, some researchers have proposed a single-phase DC-AC inverter with a lower number of components to fit the AC module, but their performance levels are lower than the ones of conventional PV Inverters. power capacity range of a single PV panel is about 100W to 300W and the (MPPT) voltage range is from 15V to 40 volts, in cases with the low input voltage, it's far harder for the AC unit to reach high efficiency [26].

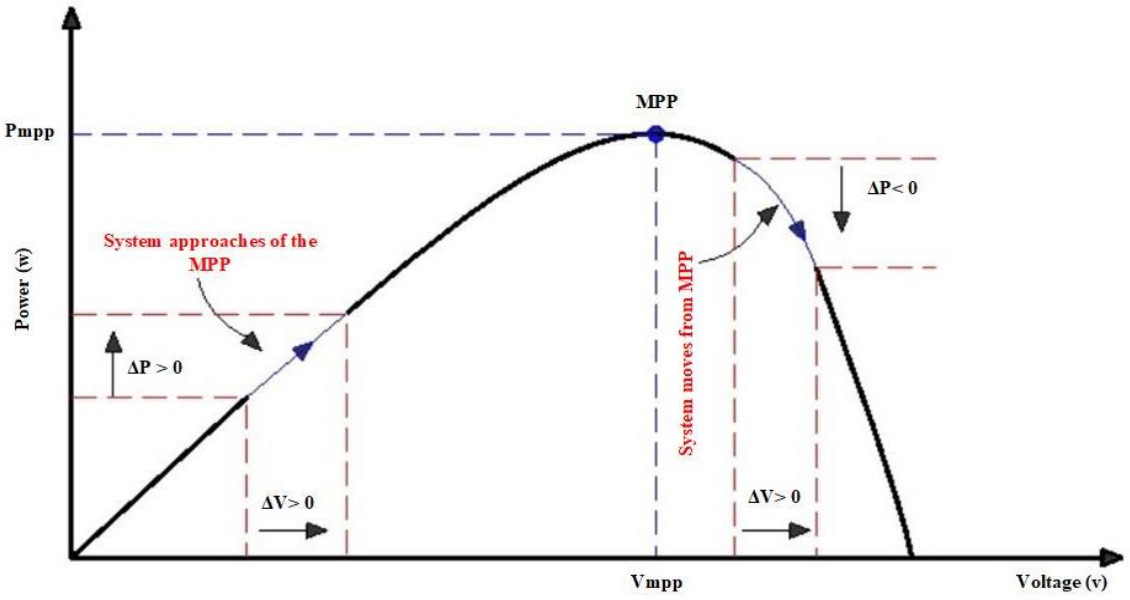

Figure 2.7. Power-Voltage of (P&O) MPPT algorithm curve.

2.3. Three-Phase Inverter

A three-level bridge inverter is a type of power electronic converter commonly used in PV systems connected to the grid [27]. Its purpose is to convert the DC power generated by the PV panels into AC power that can be synchronized with the grid. Where a three-level bridge inverter in the grid-connected electrical system is generating continuous current power [28], the PV panels generate continuous current power from sunlight, then this continuous current energy is fed into a three-level bridge inverter, then converts the continuous current energy into a frequency current by using semiconductor switches (e.g., isolated bipolar transistors of the gate or IGBT to convert the continuous current input into a high-frequency current output and to control the output voltage and frequency of the inverter [29], a technique called modification of the pulse display is used (Pulse Width Moderation). PWM adjusts the width of the switching pulses, effectively regulating the output voltage [30]. By modulating the width of the pulses, the inverter can create a stepped approximation of a sine wave, resulting in a near-sinusoidal AC output. In addition, unlike a conventional two-level inverter, a three-level bridge inverter uses additional switches and capacitors to achieve three distinct voltage levels. This allows for a more refined approximation of the sinusoidal waveform and reduces harmonic distortion in the output. In the end, The AC output from the inverter is then connected to the grid. Before connecting to the grid, the inverter must synchronize its voltage and frequency with the grid to ensure seamless integration. This is typically done by using grid synchronization techniques and control algorithms [31]. Once connected, the inverter continuously monitors the grid conditions, such as voltage and frequency. It adjusts its output accordingly to maintain stability and meet the grid requirements. It may also incorporate features like anti-islanding protection, which prevents the inverter from continuing to supply power to the grid during a grid outage.

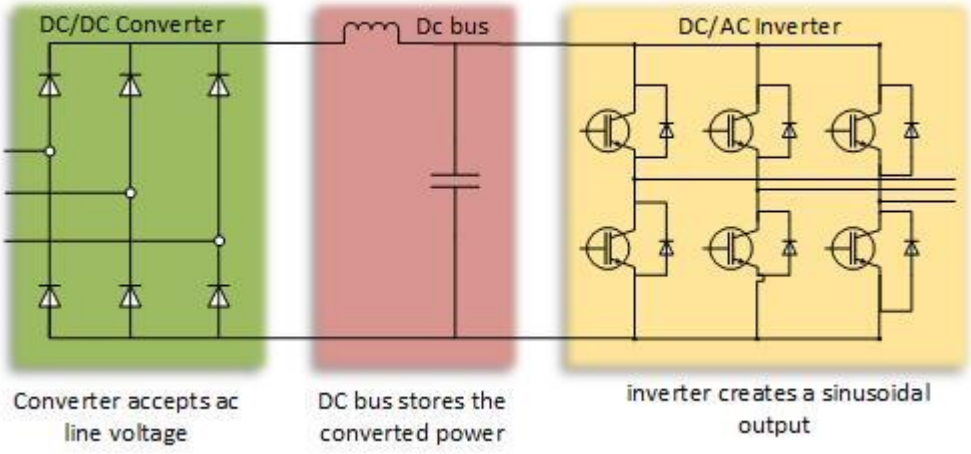

Figure 2.8. Control part of three-phase electric machines.

The inverter system was modeled based on the grid parameters shown in Table 2.3. the three-phase model consisted of six (6) IGBT switches controlled by a bipolar PWM scheme [32]. The inverter input is a relatively constant DC voltage source. The input to the PWM is the output of the cascade control unit, this is the demand voltage waveforms produced by the PI controllers from the generated error signal [33].

Table 2.3. A Simulink model of the three-phase inverter was implemented.

Parameter	Operating Value
N_p	3 arms
P_{nom}	30000 VA
V_{nom_prim}	400V
V_{nom_dc}	220V
R_s IGBT	1e6 Ω
C_s IGBT	Inf ∞
R_{on} IGBT	1e-3 Ω
V_f IGBT	0 V
V_{fd}	0 V

In general, the three-level bridge reflectivity allows the efficient and reliable conversion of the continuous current power generated by the PV panels to a frequency current that can be used by electrical loads or returned to the grid. Its three-tier topology helps to achieve high-quality wave shape to take out the frequency, reduce consensual distortion, and ensure compliance with network standards.

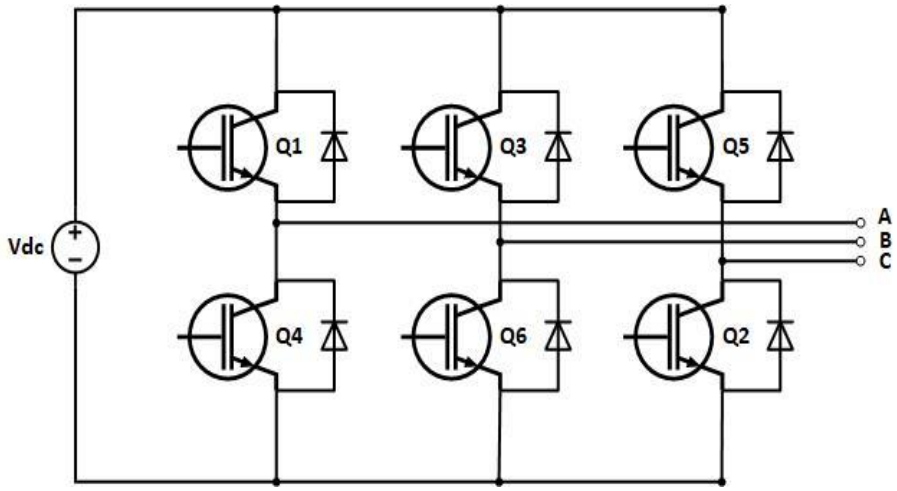

Figure 2.9. A three-phase IGBT inverter connected with a DC bus.

As seen in Figure 2.8 A three-level bridge which is used in our study as a three-level inverter is a power electronic converter used in PV systems to convert the DC output of a PV panel into AC power that can be used in the electrical grid. It requires a minimum of six semiconductors. It also requires a driver circuit and a unit providing digital-level control signals [34]. The IGBTs 1, 3, and 5 in Figure 2.9 are called the high side, and the IGBTs 2,4 and 6 are called the low side. The timing of the switching of the high and low-side semiconductors thus has to be controlled carefully to avoid closing a low-side and a high-side switch in the same "leg" simultaneously which would result in a short-circuit of the DC-voltage source [35]. The PV panel generates a DC voltage connected to the three-level bridge's DC bus. The DC bus is then connected to the upper and lower switches of the bridge. The switches are controlled by a pulse-width modulation (PWM) signal generated by a controller. The PWM signal controls the switching of the upper and lower switches, which allows the DC voltage to be converted into a three-level AC voltage [36]. The three-level voltage is then filtered by an output filter and here we use an RC filter to remove the high-frequency harmonics and generate a pure sinusoidal AC voltage that can be connected to the electrical grid.

2.3.1. RC Filter

In the three-phase inverter, an RC filter is commonly used to reduce high-frequency compatibility and improve the quality of the resulting wave shape. The main principle behind the operation of the RC candidate is to combine the resistance (R) and the intensified (C) to create a low-pass candidate.

This rubber will be connected through every device that represents the density in the reflector circle, as explained above in Figure [2.8] the proposed circle order for the lower switches.

Each button consists of three IGBTs and three pairs respectively. Each switch (IGBT) or binary valve element has a parallel sharing network (R_s, C_s, and R_{on}). R is widely used to achieve static effort participation and to reduce error in effort sharing (AV) among non-identical devices, RC filters operate by allowing low-frequency signals to pass through relatively unimpeded modems while diluting or blocking high-frequency signals. The resistor and capacitor are connected in a series or in parallel between the reflection output and pregnancy [37]. Intensities act as a frequency-based resistance, providing a low-resistance path for high-frequency components, while resistance limits current flow.

When high-frequency combinations are present in the inverter's output effort, they can cause further distortion and loss in the connected load. By merging the RC filter, these high-frequency components can be effectively filtered, resulting in a smoother pocket wave shape. The cut frequency of the filter, which is determined by the values of the resistance and the density, determines the point at which the high-frequency components begin to be lost. The RC candidate's effectiveness in mitigating compatibility depends on the selection of appropriate values for resistance and intensiveness, as well as opposition to pregnancy.

In general, the essential work of the RC candidate in the three-phase inverter involves using the combined resistance and intensive obstruction properties to reduce high-frequency compatibilities, thereby improving the quality of the wave shape and reducing the distortion of the output voltage [38].

To calculate the values of the resistor (R) and capacitor (C) for an RC filter in a three-phase inverter, we need to consider the desired cutoff frequency *(Fc)* and the load impedance. The F_c determines the point at which the filter attenuates the high-frequency harmonics.

The formula for the (F_c) of an RC filter is given by:

$$Fc = \frac{1}{2 * \pi * Rs * Cs} \tag{2.3}$$

Where Fc is the cutoff frequency (Hz), Rs is the IGBT Snubber resistance (Ω), $and\ Cs$ is the IGBT snubber capacitance (F).

To calculate the resistor value (Rs), we need to know the load impedance and select a suitable value that limits the current flow. The resistor should be large enough to avoid excessive power losses but small enough to maintain the desired F_c.

To calculate the capacitor value (Cs), we can rearrange the F_c formula as follows:

$$Cs = \frac{1}{2 * \pi * Rs * Fc} \quad (2.4)$$

Where, Cs is the IGBT snubber capacitance (F), Rs is the IGBT Snubber resistance(Ω), and Fc is the cutoff frequency (Hz).

3. LOAD GROUPS

Load groups in a PV system relate to the grouping and control of various loads attached to the system. Usually, load groups are defined according to the particular qualities, specifications, and order of the loads. Managing and controlling these load groups is a critical function of the PV system controller. To provide the right electricity source for the project, as well as the required electrical equipment from motors and generators, during the design of the loads and calculations, an initial study of the total electrical loads was conducted based on the actual space of the project.

In this study, a variety of loads, including light loads, electric motor loads, cooling and heating loads, power loads and appliances, generators, and others, are dispersed across the lab's electrical network. These loads can be classified in general as DC loads and AC loads. In addition, coupling operation with DC-motor-driven DC and AC generators has been studied successfully. We will now go over these loads, their computations, and how we can use solar energy to manage them in this unit.

3.1. DC-AC Machines in Electric Machine Laboratory

3.1.1. AC machines as an AC Load

3.1.1.1. Induction Motor

Let's start with the induction motor (IM) and a three-phase transformer on the load side of our renewable solar power supply system for a machine laboratory.

An electrical device that transforms electrical energy into mechanical energy is the IM motor. It is frequently utilized to power mechanical loads including pumps, fans, compressors, and conveyor belts in a variety of industrial applications, including machine labs. The electromagnetic induction concept underlies the operation of induction motors. They are made up of a rotor (which rotates) and a stator (which is stationary). A rotating magnetic field is created when three-phase AC electricity is delivered to the stator windings [39].

This magnetic field induces current in the rotor windings through electromagnetic induction, causing the rotor to start rotating.

Driving a mechanical load in the machine laboratory is the main job of the IM in our system. It transforms electrical energy from the renewable solar power system (the power supply system) into mechanical shaft power. The laboratory's machinery and apparatus can then be run using this mechanical power. The IM has a wide range of power ratings and essentially runs at a constant speed until full load and speed depending on the power source frequency [40].

However, there is no easy way to have variable speed control, and it requires a variable frequency, electronic power driver for optimal control.

Our AC load is directly connected to a three-phase transformer, an electrical device used to change the voltage level in a three-phase AC power system. It is often employed in electrical distribution and power systems to step up or down voltage levels as required by the connected equipment. A three-phase transformer's operation principle is based on electromagnetic induction, similar to single-phase transformers. It consists of three sets of windings: one primary winding and two or three secondary windings, depending on the configuration (e.g., delta-delta, delta-star, star-star). The turn ratio determines the voltage that is induced in the secondary windings when three-phase AC electricity is delivered to the primary winding. In our system, a three-phase transformer is used to equalize the voltage levels between your photovoltaic array's output which may be at a different voltage level and the loads in the machine laboratory. It makes sure that the induction motor and other powered devices can use the electrical power produced by the solar panels. In Figure 3.1. we can see the operation principle of the three-phase IM and the basic equations of the speed and induced torque.

In Figure 3.1 we can see the construction of the three-phase IM and the basic equations of the speed and induced torque.

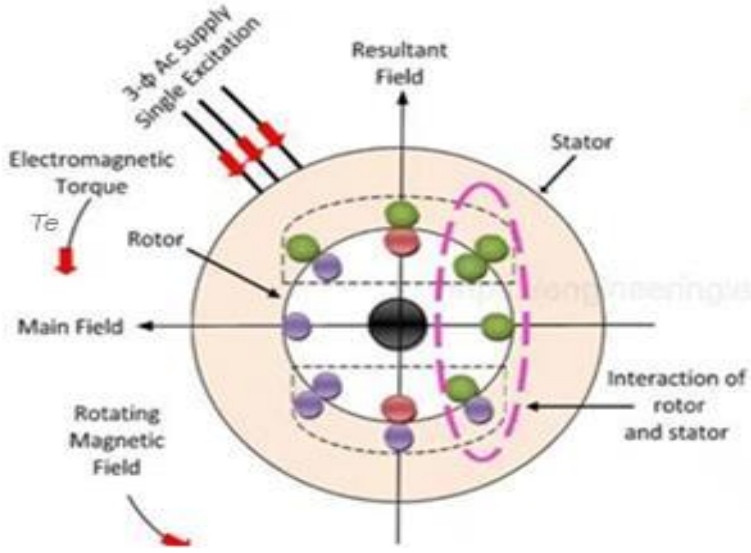

Figure 3.1. Construction and main part of the IM.

According to the construction of the IM we can calculate the torque applied on the rotor due to the stator rotating magnetic field T_e, So the induced torque can be expressed by**,**

$$T_e = \frac{\text{Po}}{\omega_m} \tag{3.1}$$

And we know that the rotating magnetic field of the induction motor produced by the stator winding rotates at synchronous speed N_s, then the power transferred from stator to rotor is given by,

$$Po = \frac{2\pi\, T_e\, N_s}{60} \tag{3.2}$$

N_s is the synchronous speed in RPM can be expressed by

$$N_s = \frac{120\, f}{P} \tag{3.3}$$

At the same time don't forget that slip is a measure of how much the actual rotor speed of the motor differs from the synchronous speed. It is defined as:

$$S = \frac{(Ns - N)}{Ns} \tag{3.4}$$

Where, Po is the output power, T_e is the induces torque, f is the frequency, P is the number of poles and it is equal to 2 in this project, ω_m is the angular speed, N is the actual rotor speed in RPM , and S is the slip of the IM [41]. Below, we mention dynamic equations of the stator and rotor voltage, which are related to current and flux linkages:

The stator voltages:

$$V_{s(a,b,c)}(t) = R_{s(a,b,c)} i_{s(a,b,c)}(t) + \frac{d\Psi_{s(a,b,c)}(t)}{dt} \tag{3.5}$$

The rotor voltages:

$$V_{r(a,b,c)}(t) = R_{r(a,b,c)} i_{r(a,b,c)}(t) + \frac{d\Psi_{r(a,b,c)}(t)}{dt} \tag{3.6}$$

The induced torque (T_e) in a three-phase IM is dependent on both the motor's electrical variables and the mechanical variables. The torque in a three-phase IM can be expressed as a time-varying quantity and is generally given by the following equation:

$$J\frac{d\omega_m}{dt} = T_e - b\omega_m - T_L \tag{3.7}$$

Where, T_L is the load torque, J is the total moment of inertia, b is the viscous friction coefficient. In the attached Table 3.1. there are the Specifications of rated values for the IM used, all of these values in the table are values in the rated values, but during the operation of the system with different working hours, these values change significantly based on the operating times and the operating machines power, but they will be very close to these values, and this is what will be explained in the fourth section of this study.

Table 3.1. Specifications of the IM at rated state.

Parameters	IM rated values
Nominal Power (VA)	4000
Line-Line Voltage (V)	400V
Frequency (Hz)	50
Rated Speed (rpm)	1430

3.1.1.2. Three-Phase Transformer

The purpose and operation of a three-phase transformer connected with a three-phase inverter in a photovoltaic (PV) system are crucial for efficient energy conversion, voltage adaptation, and grid integration. Here in our system, the main function of the transformer is focused on voltage Transformation, so it adapts the voltage levels produced by the PV panels to match the grid or local distribution system's voltage requirements. Typically, PV panels generate direct current (DC), and the transformer is used to convert this DC into three-phase alternating current (AC) at the appropriate voltage levels. Also, the primary function of the three-phase transformer is voltage Regulation, therefore, transformers also help regulate the voltage to ensure that it remains within acceptable limits, regardless of variations in PV panel output or grid conditions. This ensures a consistent and stable supply of power to the grid. Transformers provide electrical isolation between the PV system and the grid or local distribution system. This isolation is crucial for safety reasons, as it prevents electrical faults in one system from affecting the other. It also enhances safety during maintenance or repairs. In addition to all of this because of the necessity of efficiency transformers are designed to be highly efficient, minimizing losses during the conversion process. This is essential for maximizing the overall efficiency of the PV system, as higher efficiency means more of the solar power gets effectively converted and delivered to the grid.

The principal work of the transformer is to convert DC to AC, The PV panels generate DC electricity, which is fed into a three-phase inverter. The inverter function is to convert this DC power into AC power. In a three-phase inverter, this AC power consists of three separate AC voltages, each with a phase difference of 120 degrees. Then, Connection to the Transformer, The AC output from the inverter is then connected to the primary winding of the three-phase transformer. The primary winding typically receives the higher-voltage, lower-current AC power generated by the inverter. After that, within the transformer, the AC voltage is transformed to match the grid or local distribution system voltage levels. If the grid operates at a higher voltage than the inverter output, the transformer will step up the voltage. Conversely, if the grid operates at a lower voltage, the transformer will decrease the voltage. In the last, the transformer also helps synchronize the phase of the AC power generated by the inverter with that of the grid. This ensures that the AC power output by the PV system is in step with the grid, enabling a smooth and efficient transfer of power. The transformed and synchronized AC power is then fed into the grid or local distribution system through the transformer's secondary winding. This AC power can be used locally or sent to the grid, depending on the system's configuration and requirements.

Here, we will mention the basic equations for the transformer and the parameter values used in the system will be shown in Table 3.2.

Table 3.2. Specifications of the selected Three-Phase Transformer.

Transformer Parameters	Value (Pu)
Nominal Power (VA)	$30x10^3$
Frequency (Hz)	50
Total Leakage	0.045
$\boldsymbol{R_m}$ (pu) Magnetization resistance	200
$\boldsymbol{L_m}$ (pu) Magnetization inductance	200
Winding 1 (W1_xfo)	[400 0.001 0.03]
Winding 2	[114.51 0.00060004 0.015001]

In our system the used transformer is A "Yd" three-phase transformer typically refers to a transformer with a Y (wye) primary winding and a delta secondary winding. In such a transformer, the primary winding is connected in a wye (Y) configuration, and the secondary winding is connected in a delta (Δ) configuration. Here are the basic equations and relationships

for a Yd transformer.

For primer and seconder side of the transformer dynamic equations formulas are given below:

$$V_p = I_p R_p + \frac{d\Psi_p}{dt} \tag{3.8}$$

The (Line-to-Line Voltage) on the Secondary side (Vs) related to the time expressed as follows:

$$V_s = I_s R_s + \frac{d\Psi_s}{dt} \tag{3.9}$$

Where V_p, I_p, Ψ_p and R_p are primary voltage, current, total flux linkage and ohmic resistance respectively and V_s, I_s, Ψ_s and R_s refer to secondary current, total flux linkage and ohmic resistance respectively.

$$\Psi_p = I_p L_p + \Psi_m \tag{3.10}$$

$$\Psi_s = I_s L_s + \Psi_m \tag{3.11}$$

Where, Ψ_m is the main flux linkage or magnetizing flux.

The diagram which shows the main parts of the transformer are shown in Figure 3.2.

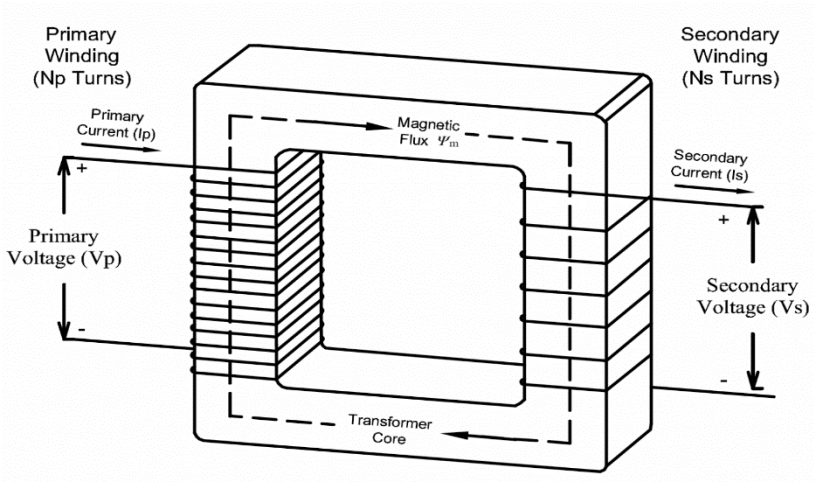

Figure 3.2. Transformer diagram with parts.

3.1.1.3. Synchronous motor

In this part of the thesis, as an AC load, a synchronous motor (SM) has been studied, a SM is an electric motor that operates at a constant speed determined by the frequency of the AC power supply. It maintains a fixed relationship, or synchrony, between the rotational speed of the rotor and the frequency of the AC power source. In laboratory machines and various industrial applications, SMs are used when precise control of speed and synchronization with other equipment is required. Here's how a SM works:

Rotor and Stator, like other electric motors, SM has a stationary part called the stator and a rotating part called the rotor [42]. The stator contains the stator windings, which are connected to the AC power supply, and the rotor is typically a permanent magnet or a wound rotor. SM is designed to run at a specific, constant speed, which is directly proportional to the frequency of the AC power supply. For example, in regions with a 60 Hz AC power supply, an SM will run at 3600 RPM (60 Hz * 60 seconds). Then, when AC power is applied to the stator windings, they produce a rotating magnetic field. This magnetic field interacts with the rotor's magnetic field, either permanent magnets or induced by the rotor windings, which is called Magnetic Field Interaction. The rotor is designed to align itself with the rotating magnetic field produced by the stator. As a result, it rotates at the same speed as the stator's field, achieving synchrony.

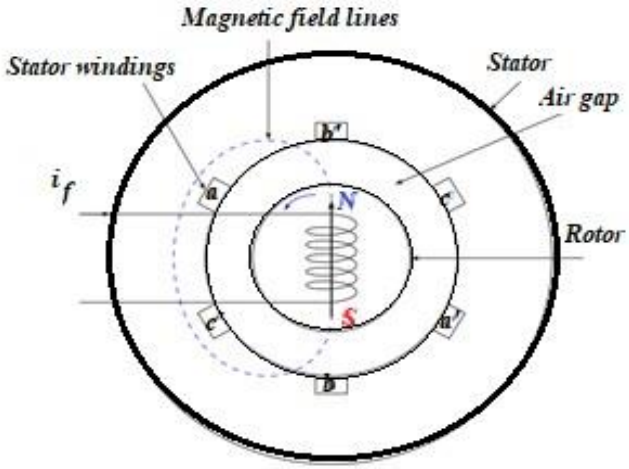

Figure 3.3. Schematic diagram of a three-phase synchronous machine.

Here is how we can control the speed and torque of the SM: controlling the torque and speed of an SM can be achieved through various methods:

By adjusting the excitation current supplied to the rotor windings, Increasing the excitation current increases the magnetic field strength and, therefore, the motor's torque, allowing for

better control over its speed, also torque can be controlled by varying the load connected to the motor shaft [43]. Increasing the load on the motor will cause it to slow down unless the power supplied to it is adjusted accordingly. This method is often used in laboratory machines where the load can be controlled precisely. In some cases, the motor's speed can be controlled by varying the frequency of the AC power supply. However, this is less common in practice and can be complex. and in the last modern SM can be controlled electronically using variable frequency drives (VFDs) [44]. These devices can vary the frequency and voltage of the power supply to the motor, allowing for precise control of both torque and speed.

And here, we have the dynamic Electrical equations of SM for rotor and field circuit:

$$V_{a,b,c} = I_{a,b,c}R_{a,b,c} + \frac{d\Psi_{a,b,c}}{dt} \quad (3.12)$$

$$V_f = I_f R_f + \frac{d\Psi_f}{dt} \quad (3.13)$$

$V_a, I_a, R_a, L_a, Y_a, V_f, I_f, R_f, L_f, Y_f$ armature voltage, current, inductance, and flux, rest of the symbols are related to field circuit. And here, the dynamic mechanical equations are given by:

$$\omega_e = \frac{P}{2}\,\omega_m \quad (3.14)$$

$$P_e = T_e\,\omega_m \quad (3.15)$$

$$\frac{d\omega_e}{dt} = \frac{P}{2J}(T_e - T_L) \quad (3.16)$$

Where ω_e electrical angular speed, P total number of pole, mechanical angular speed, P_e *and* T_e are the induced power and torque in the rotor respectively, T_L load torque.

In the attached Table 3.3. there are the Specifications of rated values for the SM used, we note that the motor speed is equal to 1500 rpm at the rated value, but during work and operation the speed is arrived to 1200 rpm, and this will be explained in the fourth section of this study.

Table 3.3. Specifications of the selected SM.

Parameters	SM rated values
Nominal Power (VA)	16 KVA
Voltage (V)	400V
Frequency (Hz)	50
Rated Speed (rpm)	1500

3.1.1.4. RLC Load

An RLC load, which consists of resistive (R), inductive (L), and capacitive (C) components, can be used in electrical machines and circuits for various purposes, depending on the specific application and requirements. So, using an RLC load of 5k ohms (5,000 ohms) as in the system on the AC Bus side has many purposes for using, its used as:

1. Power Factor Correction: Electrical machines, such as induction motors, often have a lagging power factor (i.e., they are inductive loads). By adding capacitive elements (C) to the load (RLC), you can improve the power factor and make it closer to unity (1.0). This reduces the reactive power consumption and, in turn, reduces energy losses and improves the efficiency of the electrical system.
2. Voltage and Current Control: RLC loads can be used to control voltage and current levels in electrical machines and circuits. By adjusting the values of the resistor (R), inductor (L), and capacitor (C), you can influence how voltage and current behave in the system, which is crucial for ensuring stable operation.
3. Testing and Characterization load, An RLC load can be used to simulate the electrical load that a PV system might encounter in real-world applications. This allows for testing the performance of the PV system under various load conditions. By varying the load resistance, inductance, and capacitance values within the RLC load, it can characterize how the PV system responds to different loads. This helps in understanding the system's behavior under varying electrical loads.
4. Transient Voltage Suppression: RLC loads can help protect electrical machines from transient voltage spikes and surges, which can occur due to lightning strikes or other external factors. The inductive and capacitive elements in the load can absorb and dampen these transient events, preventing damage to the machines.
5. Inverter Testing: The RLC load can be connected to the output of the PV inverter to evaluate the inverter's performance under different load conditions. This is particularly important in grid-tied PV systems, where the inverter must adapt to varying grid conditions.
6. harmonic Testing. So, RLC loads can be configured to introduce harmonics into the system. By varying the load parameters, it can assess how the PV system handles harmonic distortion and its impact on power quality.
7. Grid Integration: When connected to a grid-tied PV system, the RLC load can help assess how the PV system interacts with the electrical grid. This includes studying voltage and frequency regulation under different load scenarios.

8. Load Matching: In certain scenarios, it is used to match the load to the PV system's output for optimal energy utilization. The RLC load can be adjusted to consume the energy produced by the PV panels, helping to balance energy generation and consumption.

The last use for the RLC load as experimentation: In research and development projects related to PV systems, the RLC load can serve as a versatile tool for experimentation. It allows engineers and researchers to explore different scenarios and gather data for analysis.

3.1.2. DC Machines

3.1.2.1. DC Motor as a DC Load

Using a DC motor on the DC bus side after a DC-DC converter in a photovoltaic (PV) system can have various applications and benefits, here's a description of how a DC motor can be integrated into this system. adding a DC motor on the DC bus side means connecting a DC motor to the same DC electrical system that's used for the PV panels and the DC-DC converter. Here's how it can be done:

Integration of a DC Motor:

Incorporating a DC motor into the laboratory setup involves the following steps:

1. Choosing an appropriate DC motor that suits the laboratory's requirements. without forgetting factors such as power rating, speed range, and torque capabilities, depending on the types of experiments and demonstrations that will be conducted.
2. Installing a motor controller or inverter that allows precise control of the DC motor's speed and direction. This controller should be compatible with the motor and should provide the necessary interfaces for external control and monitoring.
3. Configuration for the laboratory setup or experimental apparatus to which the DC motor will be connected. This could include a mechanical load, test bench, or any machinery relevant to the laboratory experiments.

Integrating a DC motor into a PV system for a machine laboratory can create a valuable educational and research tool. It allows students and researchers to gain practical insights into the operation of DC motors, renewable energy systems, and energy-efficient control strategies while conducting experiments and hands-on demonstrations.

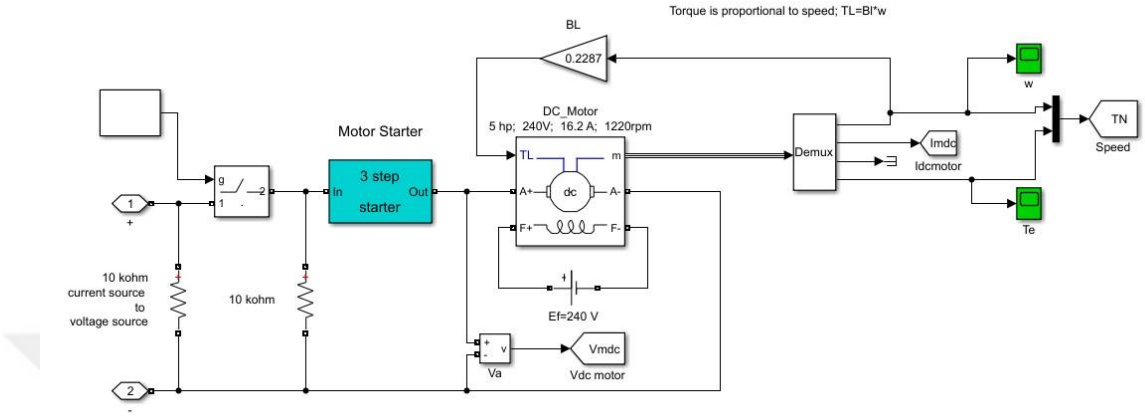

Figure 3.4. Simulation for DC Motor.

3.1.2.2. Ohmic Load

Adding an ohmic load to a system that includes a DC motor can have various applications and effects on the motor's behavior. Here in our system, we add a 2 KW load as a fixed resistor connected in parallel with the DC motor. The exact connection method will depend on the specific circuit and control setup. When the ohmic load is added, it affects the overall system behavior and the DC motor's operation. and we should note that increasing the load resistance will typically slow down the motor's speed while decreasing the load resistance will increase the speed. It is used as a speed controller and monitors the motor's current and voltage. it also affects the torque produced by the motor. Higher loads result in higher torque requirements.

In practical applications, adding an ohmic load can be part of a control strategy to regulate the motor's speed and torque. Motor control systems can adjust the load to maintain desired operating conditions. Adding an ohmic load to a DC motor system provides a means of testing and studying the motor's performance under different load conditions, which is valuable for both educational and practical purposes, such as in automation, robotics, and industrial processes.

3.2. Generators

3.2.1. DC Motor – DC Generator

The DC-DC converter's voltage regulating abilities can be used to efficiently control and operate DC loads connected to the converter. The needed operating voltage and the maximum current drawn are established after determining the load and the required current for the load. The positive and negative terminals of the load are linked to the appropriate output terminals of the DC-DC converter, and then the suitable transformer is chosen and connected [45]. In order to meet the needs of the associated load, we therefore modify the DC-DC converter's output voltage. Typically, a cut-off potentiometer or a voltage reference applied to the transformer will do this.

Depending on the control requirements, the use of various control algorithms to regulate the output voltage of the DC-DC converter. In this study, we used a PI controller to continuously adjust the D or set point of a DC-DC converter based on the difference between the required output voltage and the measured output voltage. PWM control is also made using the PWM signal to adjust the D of the DC-DC converter [46], thus regulating the output voltage.

By using a DC-DC converter with appropriate control mechanisms, you can regulate the output voltage to meet the demands of connected DC loads. This allows for efficient and reliable operation of loads while maintaining control over their power supply.

One benefit of this study is that alternative solutions to the issues with solar energy under-nutrition have been implemented. If there is a problem with the network being exposed to sudden malfunctions or other issues that the proposed solar cell system may face, generators have been used to get the system to a permanent operating state and not to disrupt it regardless of the circumstances. Here, we are going to show you how to connect the load to the generator and how we control the speed and torques of them.

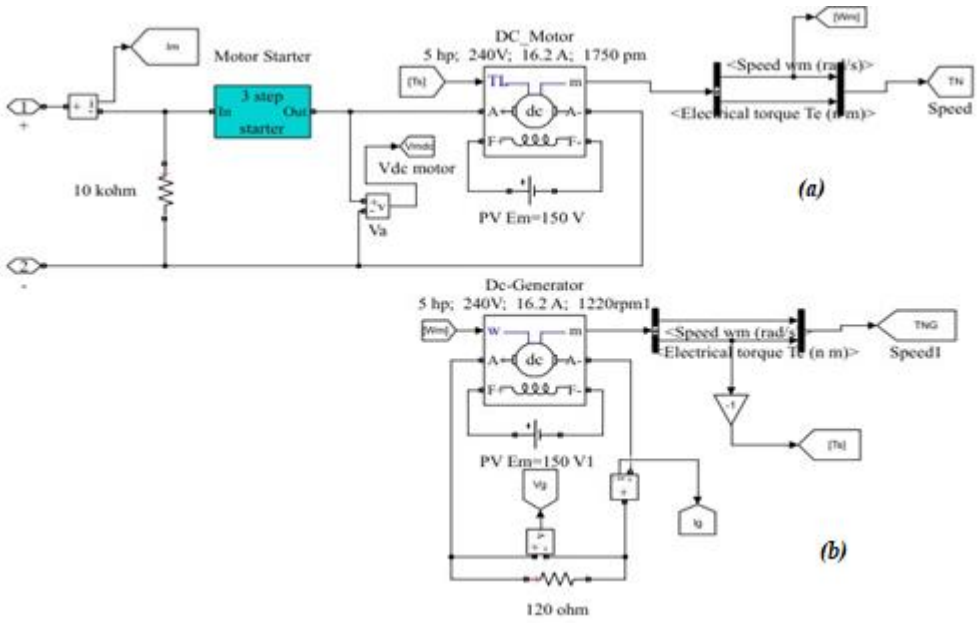

Figure 3.5. DC motor (a)worked out by DC generator(b) in a closed loop.

When a DC generator is connected to a group of DC loads, it provides electrical power to those loads. The DC generator is usually connected in parallel with the DC loads, DC generator voltage regulation involves that the output voltage remains relatively stable and within the required range. This can be achieved through various means, such as a voltage regulator or a control circuit within the generator. This regulation helps maintain a constant power supply for the connected loads. Thus the DC loads are connected in parallel, which means they receive the same voltage from the generator. Loads can have different current requirements, and the generator must be able to supply the total current required by the loads. The generator output capacity must be sufficient to meet the cumulative current requirements of all loads.

In some cases, additional control mechanisms can be implemented to improve generator operation in response to load changes. For example, if the load increases in demand, the generator may adjust the throttle or excitation to maintain output voltage and provide sufficient power. Likewise, if load demand decreases, the generator control system may reduce its output to save fuel or improve efficiency.

Here we will explain how to Control the Speed of a Separately Excited DC Motor compound with a Separately Excited DC Generator:

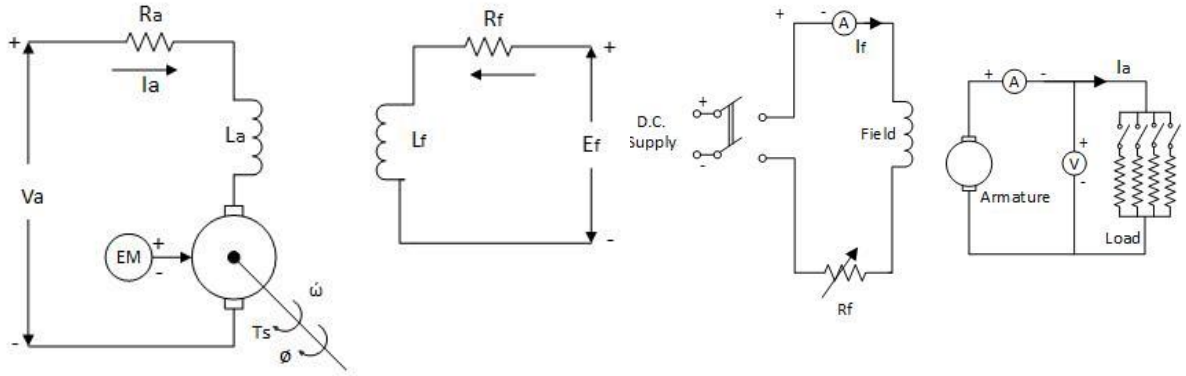

(a) (b)

Figure 3.6. Equivalent circuit of the DC motor(a) which drives the DC generator(b).

The motor has armature and field winding with separate supply. The field windings of the DC motor excite the field flux. Current in the armature circuit is supplied to the rotor via brush and commutator segment for the mechanical work [47]. The interaction of field flux and armature current produces the rotor torque. we have different speed and torque control across field resistance, motor voltage and motor impedance, and Field control method but we focused on those two methods:

1. Field control: By adjusting the field current (I_f) of the DC generator, the magnetic field strength can be changed, which affects the output speed and torque. Increasing the I_f will increase the magnetic field strength, increasing speed and torque, while decreasing the I_f will decrease the magnetic field strength, resulting in a decrease in speed and torque [48].

2. Armature control: By adjusting the voltage applied to the armature of the DC generator, the output speed and torque can be controlled. This is typically achieved by using a voltage regulator or a PWM controller. Increasing the voltage will increase the output speed and torque while decreasing the voltage will decrease the output speed and torque.

When a separately excited DC motor is excited by a field current of 'I_f' and an armature current of 'I_a 'flows in the circuit, the motor develops a back EMF 'E_m' and a torque to balance the load torque at a particular speed. The 'I_f' is independent of the 'I_a'. Each winding is energized separately. The I_f is generally much less than the I_a

$$V_a = E_m \pm I_a R_a + L_a\left(\frac{dI_a}{dt}\right) \tag{3.17}$$

The sign of refers to whether the machine is motor (+) or generator (-), Va is main voltage and I_a is the armature current, R_a is the armature resistance, L_a is the armature inductance, and Em is the back emf of the armature, obtained by

$$E_m = K_m \phi_f \omega \tag{3.18}$$

where K_m is armature constant, ϕ_f is the magnetic flux (Wb) of excitation circuit $\phi_f \frac{N_f}{L_f} = I_f$, and ω is the angular speed introduced as:

$$\omega = \frac{2\pi N}{60} \tag{3.19}$$

N is the revolution per minute(rpm), and the torque induced by the system is given by

$$T_e = K_T \phi_f I_a \tag{3.20}$$

where K_T is a constant, ϕ_f is the magnetic flux (Wb) , I_a is the armature current. In the attached Table 3.4. there are the Specifications of rated values for the machine and generator used, which are referred to in Figure 3.5. We also note that the machine and the generator were chosen with the same specifications, but during work and operation they budge so that the generator and the machine work at the same speed but the torque generated by the generator is less than the torque produced by the machine, and this will be explained in the fourth section of this study.

Table 3.4. Specifications of this system DC Machine and DC Generator.

Identification	DC MACHINE	DC GENERATOR
Rated speed	1750rpm	1750rpm
Rated voltage	240V	240V
Rated current	16.2A	16.2A
Field Voltage	150V	150V

3.2.2. DC Motor – AC Synchronous Generator

Construction of a synchronous generator and its principal work:

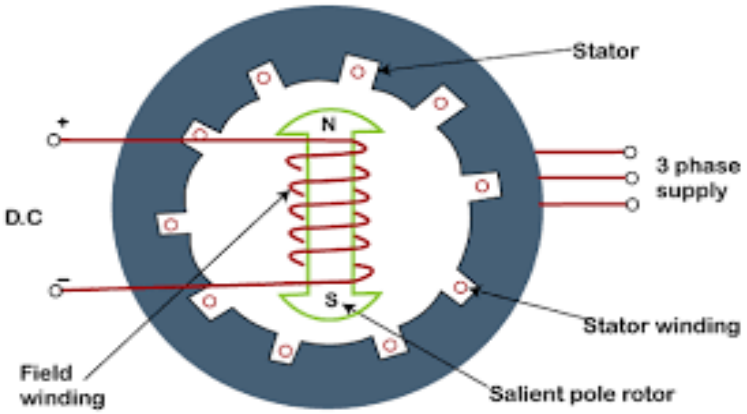

Figure 3.7. Schematic diagram of a three-phase synchronous Generator [49].

An alternator also referred to as a synchronous generator, uses the electromagnetic induction principle to transform mechanical energy into electrical energy [49]. We shall demonstrate the synchronous generator's design and working principle. A synchronous generator consists of:

1. Rotor: The rotor of a synchronous generator consists of a field winding wound on a shaft. The field winding is typically excited with a (DC) to create a magnetic field. The rotor may have salient poles (projecting poles) or a smooth cylindrical shape, depending on the design [50].

2. Stator: The stator is the stationary part of the generator and consists of a laminated core with slots. The stator winding, also known as the armature winding, is wound in the stator slots. The number of slots in the stator corresponds to the number of poles on the rotor [51].

3. Excitation System: the excitation system provides the DC current to the field winding on the rotor. It includes devices such as slip rings or a brushless exciter to supply the DC excitation current.

Principle of Operation:

A magnetic field is produced inside the rotor when the field winding on the rotor is stimulated by a DC current. The magnetic field of the rotor can either be dispersed (spread evenly throughout the rotor circumference) or salient (pole-to-pole). The magnetic field then rotates at synchronous speed as the rotor is propelled by a mechanical prime mover (such as a steam turbine, gas turbine, or hydro turbine) [52]. The frequency of the produced voltage and the number of poles on the rotor both affect the synchronous speed. Due to the electromagnetic

induction principle, the revolving magnetic field on the rotor produces a voltage in the stator windings. A changing magnetic field creates an electromotive force (EMF) in the stator windings in accordance with Faraday's law [53]. The stator windings produce the voltage of an alternating current (AC). The output of the vast majority of synchronous generators is normally three-phase. The frequency of the AC output voltage is directly influenced by the rotor's rotational speed and the number of poles [54]. Synchronizing synchronous generators with the power grid or other generators is also necessary before connecting them to the electrical network. Synchronization includes matching the system's characteristics to the frequency, voltage, and phase angle of the generator output.

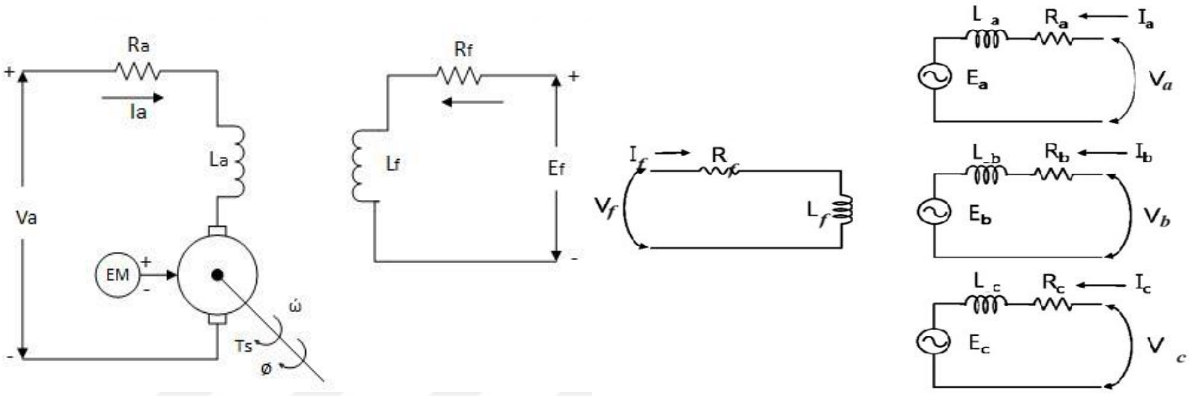

(a) (b)

Figure 3.8. DC motor (a) driven AC synchronous generator equivalent circuit (b).

The required dynamic formula for electrical circuit of AC generator is given by:

$$V_a = -R_a I_a + \frac{d\Psi_a}{dt} \tag{3.21}$$

$$V_b = -R_b I_b + \frac{d\Psi_b}{dt} \tag{3.22}$$

$$V_c = -R_c I_c + \frac{d\Psi_c}{dt} \tag{3.23}$$

The excitation electrical circuit:

$$V_f = R_f I_f + \frac{d\Psi_f}{dt} \tag{3.24}$$

Where, R_f is the resistance of the field coil, L_f is the inductance of the field coil, V_f is the input voltage of the field coil, $R_{a,b,c}$ is the resistance of the armature coil, $L_{a,b,c}$ is the inductance of the armature coil, and $V_{a,b,c}$ is the input voltage of the armature circuit.

The connection between a DC motor and an AC synchronous generator typically involves mechanical coupling and control mechanisms to enable power generation. Here's how it is the connection between these two components, in the first the DC motor and AC synchronous generator are mechanically coupled using a shaft or a belt-drive system. This allows the rotational motion generated by the DC motor to drive the AC synchronous generator which is called Mechanical Coupling, then the DC motor is used as a prime mover or a mechanical driver for the AC synchronous generator. It converts electrical energy into mechanical energy, providing the rotational input to the generator, and to effectively connect the DC motor and AC synchronous generator, control mechanisms are employed. These mechanisms ensure that the DC motor operates at an appropriate speed and provides the necessary torque to drive the generator. and the aim of this coupling system it's how to control the output speed and torque:

1. Speed Control: A speed control system regulates the rotational speed of the DC motor, which in turn determines the rotational speed of the AC synchronous generator. This control is typically achieved using a speed controller or a feedback control loop.
2. Torque Control: The torque produced by the DC motor is controlled to match the requirements of the AC synchronous generator. This can be achieved through various control methods, such as adjusting the motor current or using a torque controller.
3. Power Generation: As the DC motor drives the AC synchronous generator, the generator starts producing AC electrical power. The output power is determined by factors such as the rotational speed of the generator, the strength of the magnetic field, and the load connected to the generator.

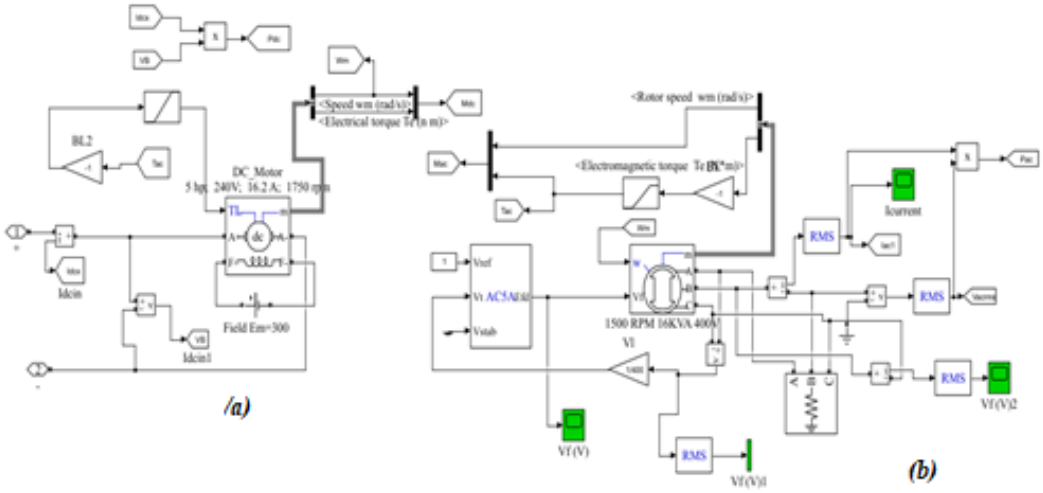

Figure 3.9. MATLAB implementation of DC motor driven(a) AC synchronous generator (b).

At the AC bus portion of the system, the AC synchronous generator is connected to the load through a closed loop and the speed and torque of the generator are controlled. The simplest means of synchronous generator control is speed control via control of the frequency of the applied armature voltage, driving the motor by a more polyphase voltage-source inverter such as the three-phase inverter the inverter can either be used to supply stepped AC voltage waveforms of amplitude V, tc, or the switches can be controlled to produce pulse-width-modulated ac voltage waveforms of variable amplitude. In a direct-coupling DC motor and synchronous generator system, when the motor's speed is positive, the motor and the generator rotate at the same speed. Therefore:

Speed-M = Speed-G

where Speed-M is the speed of the motor, and Speed-G is the speed of the generator. The torque developed by the motor (T_m) is proportional to the armature current (I_a) and the motor's torque constant (K_m):

$$T_m = K_m * I_a \tag{3.25}$$

The torque that occurs in the generator is [- T_m].

The following Table 3.5. indicates the rated values for the DC machine and the AC Synchronous generator, which were chosen through the MATLAB program, but during the rotation and operation process, we notice that the speed of the generator becomes equal to the speed of the DC machine, as the generator, in this case, has become working as a load, and therefore we note that the torque generated by the generator is opposite in direction of rotation resulting from the Motor, and this will be explained in the simulation part of the fourth section.

Table 3.5. Specifications of DC Motor and AC Synchronous Generator.

Identification	**DC Motor**	**AC Synchronous Generator**
Rated speed	1750rpm	1500rpm
Rated voltage	240V	400V
Rated current	16.2A	40A
Field Voltage	300V	11.7V

4. SIMULATION RESULTS AND DISCUSSION

4.1. Modeling Simulation Results

Simulation and experimental expected results of this project by applying a solar cell system connected to the grid with a capacity of 25 kW for an electrical laboratory are presented in this chapter. the system simulation, as well as modeling, is done using MATLAB to approve the control procedure and assess the system performance. simulation model is shown in Figure 4.1. Solar irradiance and temperature are produced as inputs for the Standard Test Conditions STC (DG) by getting a scaled dataset from a weather station for use in the simulation model. For the purpose of defining a random load pattern for a laboratory lesson, Fig. 4.2 shows the response of Vdc and PV power for the change in irradiance. At t= (0.5-1) sec., irradiance is reduced from 1000 to 700 W/m2, the DC voltage is approximately 224 volts and the generation power of PV is totally equal to 25 KW. Figure 4.1 shows that the voltage and power curves follow the maximum value of the PV array voltage once the radiation is changed.

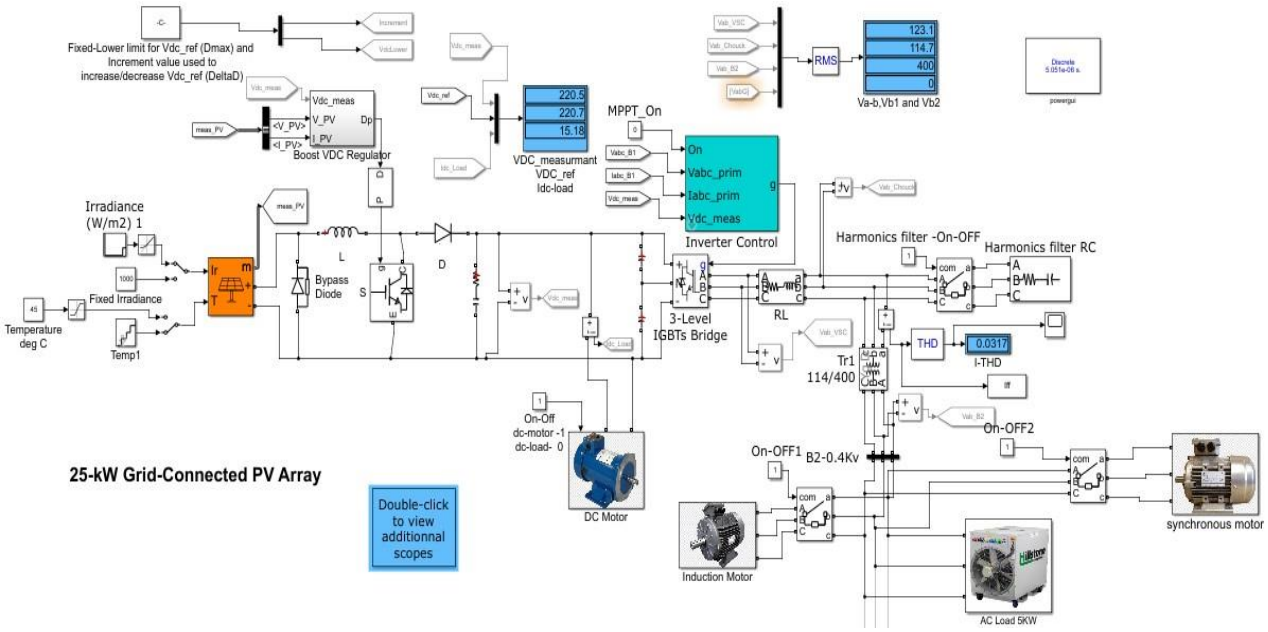

Figure 4.1. Simulation of the proposed system.

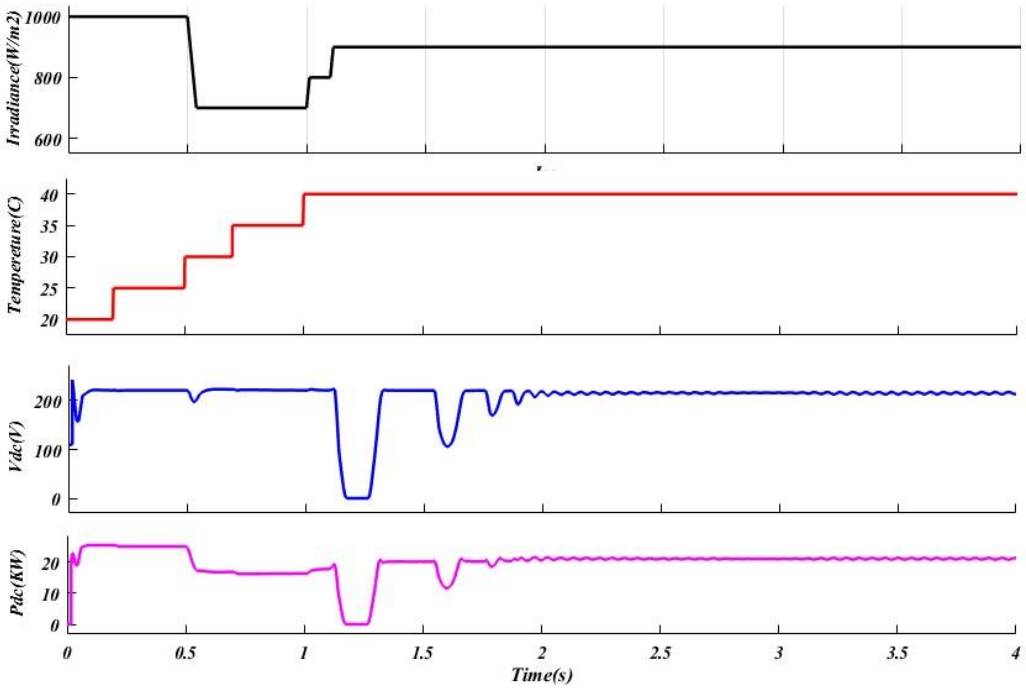

Figure 4.2. (a) Solar irradiance; (b): Temperature; (c): Vdc mean; (d): PV Power.

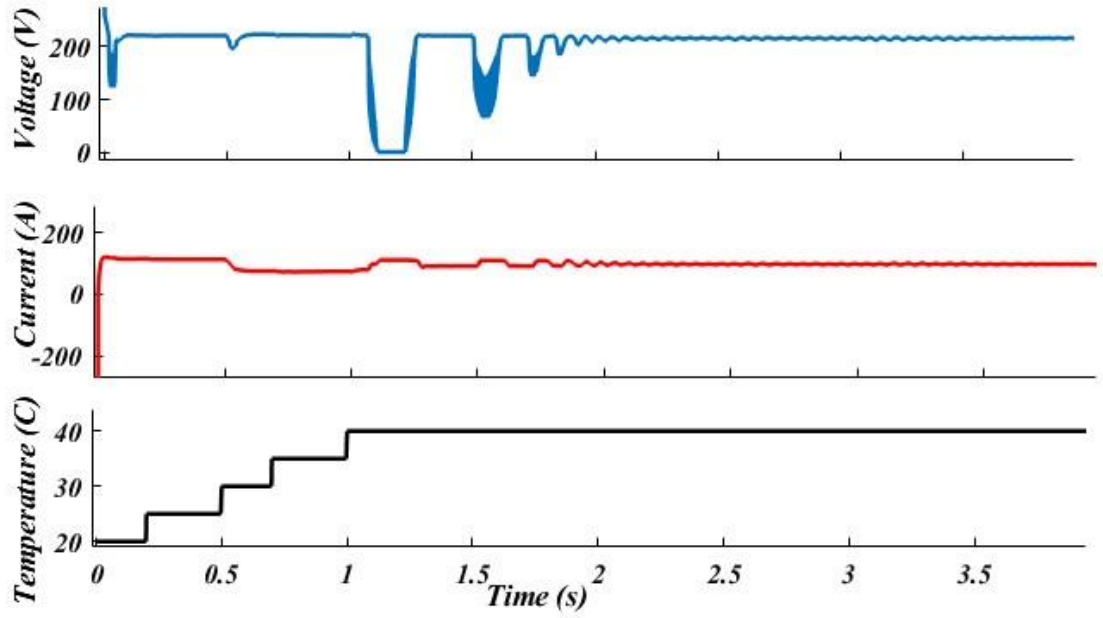

Figure 4.3. (a) PV voltage; (b): PV current.

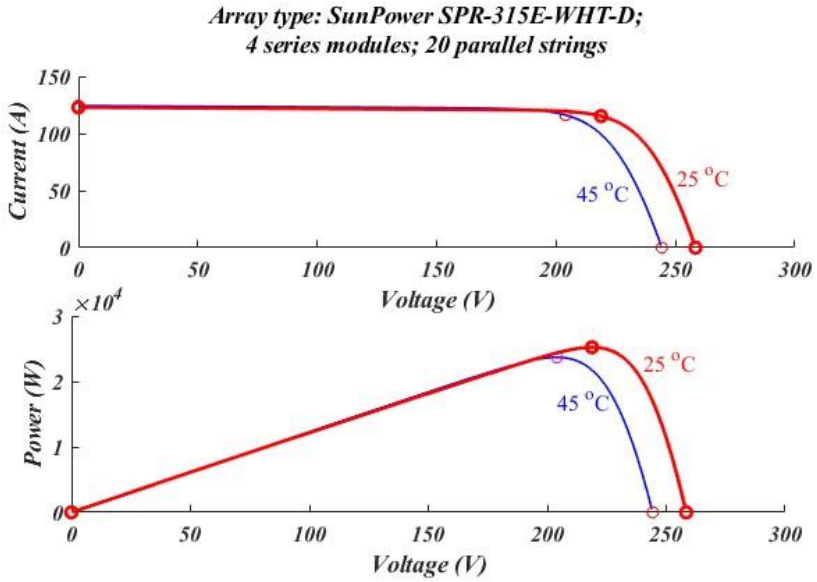

Figure 4.4. (a) (V-I) and (b) (V-P) Curves of the system at STC.

Prior to system integration, all of the grid-connected system's components were frequently tested under ideal circumstances to ensure their functionality. According to Figure 4.3, the simulated Sun Power SPR-315E-WHT-D solar panel's current, voltage, and temperature curve at STC, open-circuit voltage Voc= 64.6 V occurs at current density I=0 A, whereas short-circuit current I=6.14 A occurs at voltage V=0. These are in line with the panel datasheet's values. The PV panel system's power, current, and voltage are shown in Figure 4.4.

The values were achieved by increasing the open circuit values Voltage, as the system contains 80 cells connected to the 4 branches in parallel, each branch connected to 20 cells in series, and the serial resistance of each cell. From the power curve shown in Figure 4.2.d the maximum power of the total panels is equal to 23.6KW and from the voltage curve shown in Figure 4.2.c and Figure 4.3. the maximum voltage is equal to 217 V which is quite close to the rated values shown in Figure 4.4. b which are 25 KW at and 220 V respectively, and as shown in Figure 4.3.b the maximum current value is equal to 100 A which is also quite close to the rated value shown in Figure 4.4.a with a value of 113 A at the same voltages.

In most PV modules, the module output varies with insolation and temperature. The efficiency of a unit based on sunlight was not sufficient; Therefore, it needs to work continuously to achieve the maximum possible MPP load under variable temperatures and insolation environments [55]. This in turn helps to enhance the utilization and efficiency of the system. MPPT based on the P&O algorithm is used to extract the energy from the solar PV module and transfer it to the load so that it is transmitted through the use of a boost converter which in turn

improves the efficiency of the system as it acts as an interface between the PV and the loads, as shown in Figure 4.5.

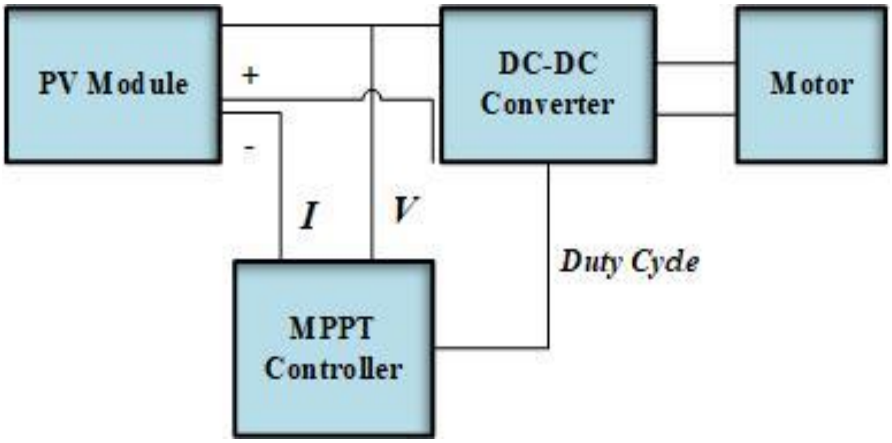

Figure 4.5. Block diagram of P&O MPPT algorithm and DC-DC Converter.

A straightforward and efficient algorithm for (MPPT) in (PV) systems is the P&O algorithm. It operates by varying the PV module's input voltage and tracking changes in output power. The perturbation is maintained in the same direction as the output power increases. The perturbation is reversed if the output power falls. Up till the MPP is reached, this process is repeated. The P&O algorithm is quite straightforward to use and noise isn't a big deal for it. However, particularly in systems with a lot of inertia, it can take some time for the maximum power point to converge.

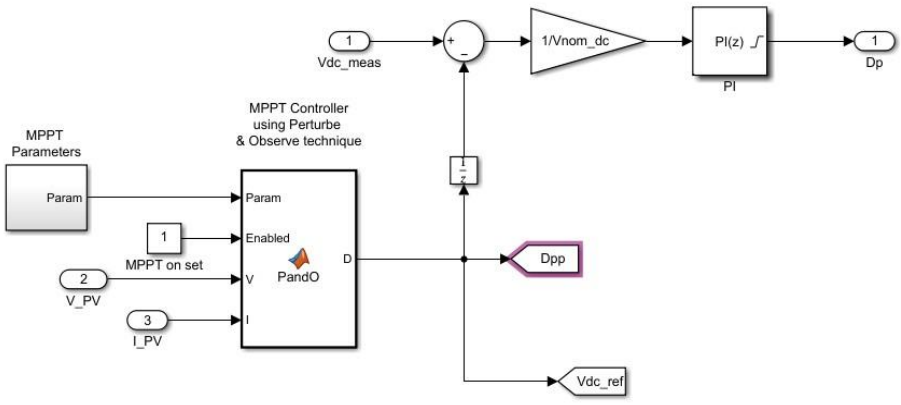

Figure 4.6. Simulation of P&O MPPT algorithm.

Because of using IGBT is utilized to regulate the power flow in the transformer, the MPPT algorithm is implemented in the simulation using the P&O approach, where two gate pulses are created with a 180° delay utilizing transfer delay. Consequently, the output power of a PV array

changes along with changes in solar radiation. Irradiation and temperature are used as input factors in a simulation to construct the whole mathematical model of the PV module's single diode. So, the simulation results show that the MPPT "Turbulence and Monitoring" searches for the point of maximum strength in each changing weather condition and that the control system is stabilized at that point as shown in Figure 4.8. The solar panel chooses the variable voltage and current for various temperatures and radiation levels, because of that and with variable climatic conditions, the output voltage of the boost converter reaches its maximum value and then stabilizes [56]. The variation of climatic conditions affects them in such a way that their value decreases which is described in Figure 4.7.

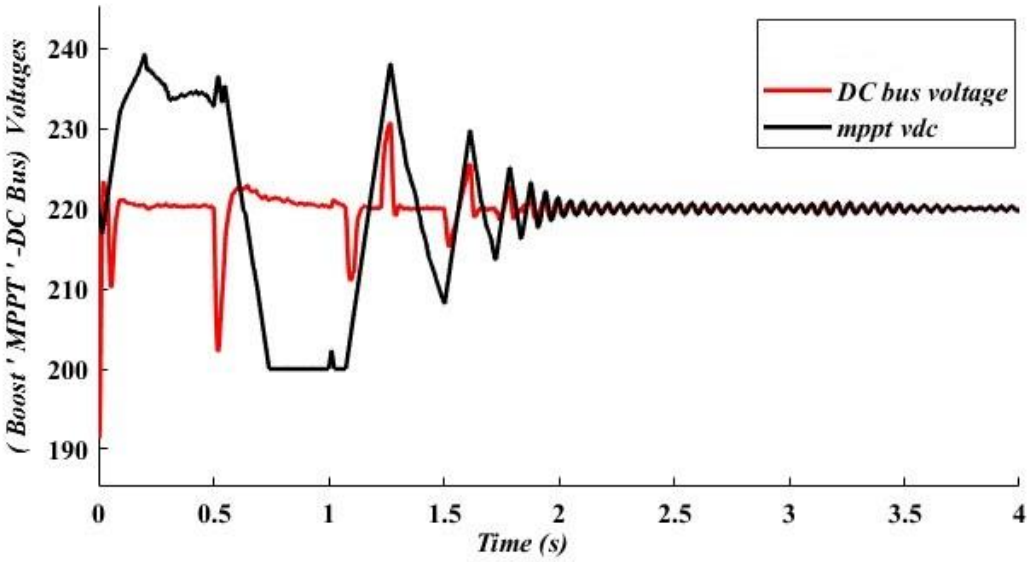

Figure 4.7. Boost Converter and DC-Bus voltages curve.

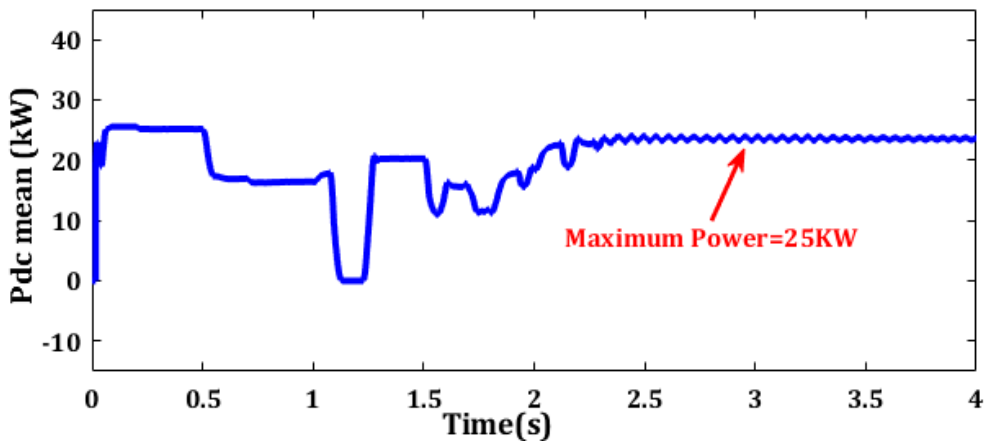

Figure 4.8. The maximum output power of the generation system.

In the left part of our system, we notice in Figure 4.9 the simulation of the control process that takes place through the three-phase inverter, as this part contains a group of components that work together to regulate and control the operation of the inverter, enabling it to efficiently convert DC power from the SP into usable AC power that can be fed into the grid or used locally. Additionally, the inverter control system may include various protection mechanisms to ensure safe operation and fault detection.

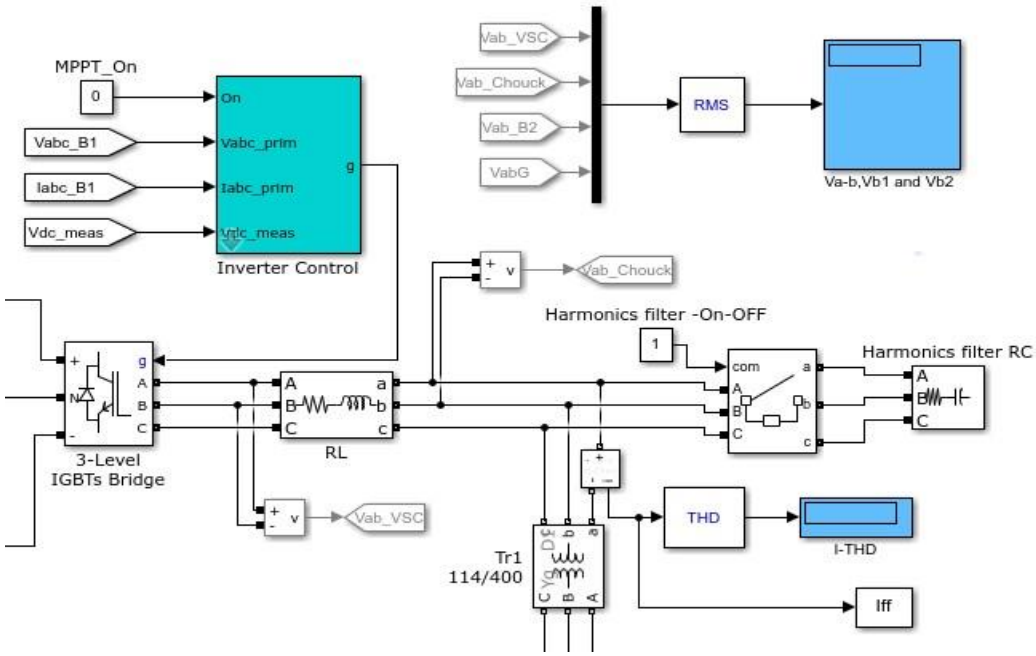

Figure 4.9. Simulation of the DC-AC three-phase inverter.

The main components of Inverter Control, particularly in the context of solar inverters or grid-tied inverters for renewable energy systems, are illustrated in the blocks in Figure 4.9, are as follows:

PLL & Measurements: PLL stands for Phase-Locked Loop. It synchronizes the inverter's output with the grid voltage, ensuring that the generated power is in phase with the grid's voltage [57]. This synchronization is critical for safe and efficient grid-tie operation.

Maximum Power Point Tracker System (MPPT): The MPPT system is responsible for extracting the maximum power from the connected SP. SP has a non-linear voltage-current characteristic, and its MPP can vary based on external factors like shading and temperature. The MPPT uses algorithms like Perturb & Observe or Incremental Conductance to continuously adjust the inverter's operating point to maximize the power output from the SP [58].

DC Voltage Regulator: The DC voltage regulator ensures that the DC voltage from the SP is appropriately controlled and maintained at the required level. It keeps the voltage within acceptable limits to prevent damage to the inverter and other system components.

Current Regulator: The current regulator monitors and controls the output current of the inverter to ensure it matches the grid's requirements and any safety regulations. It helps maintain grid stability and prevents excessive currents from flowing into the grid.

PWM Modulator: The Pulse Width Modulator (PWM) generates the switching signals to control the power transistors in the inverter. By modulating the width of the pulses, the inverter can convert the DC power from the SP into an AC waveform that matches the grid frequency and voltage [59].

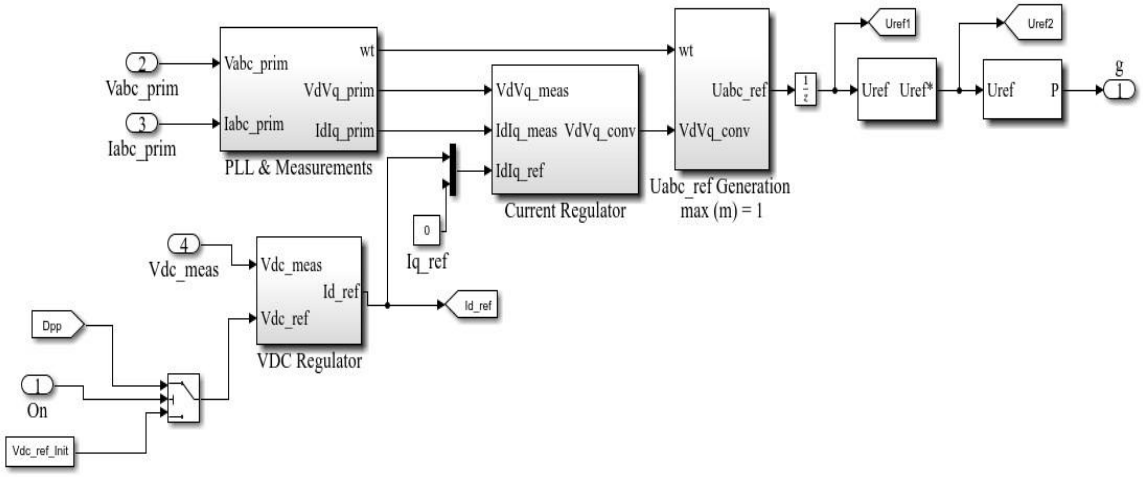

Figure 4.10. simulation of the inverter control.

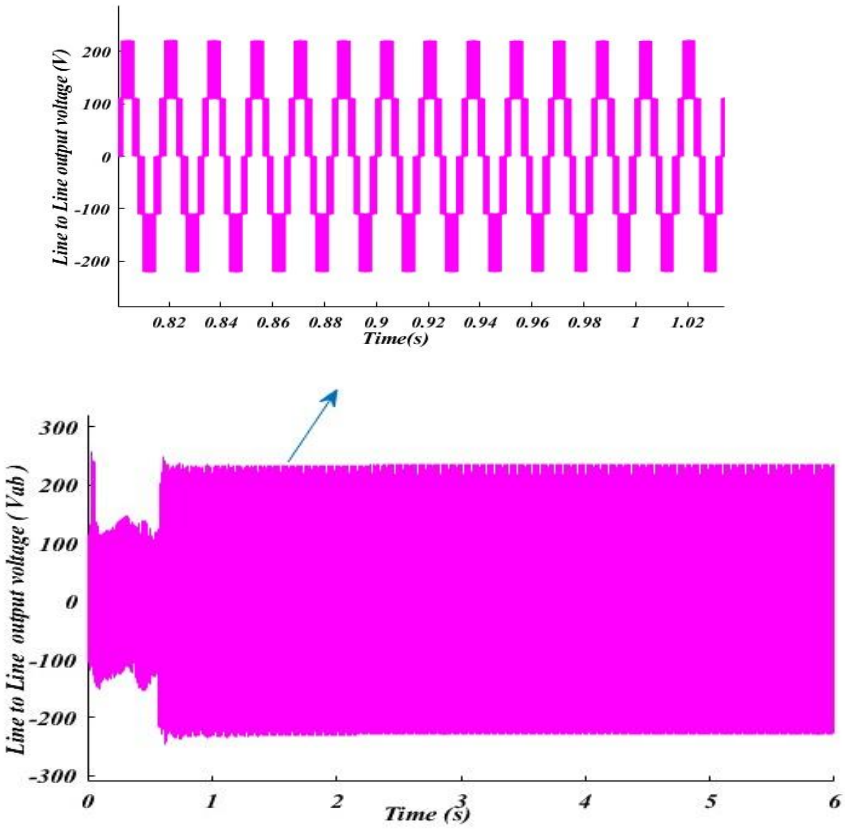

Figure 4.11. Phase a to phase b output voltage of the inverter.

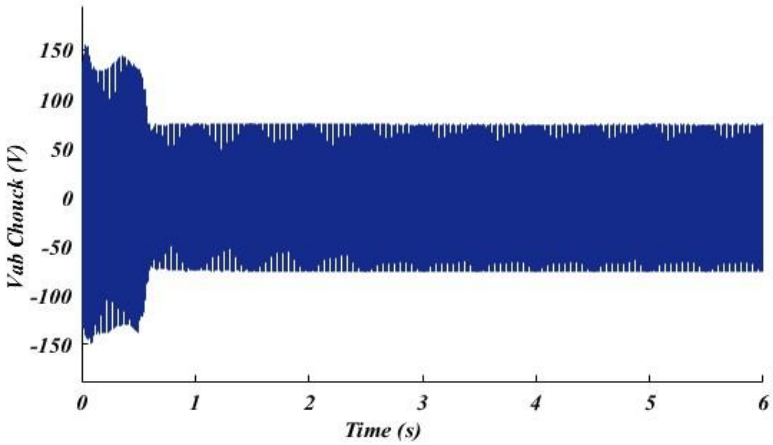

Figure 4.12. Phase a to phase b voltage after adding machines.

The zoomed area (Figure 4.11.) makes it clear that the line-to-line voltage was approximately at 235 volts before the RL load was added. In Figure 4.12, the voltage is seen to have decreased to 75 volts after the load was added.

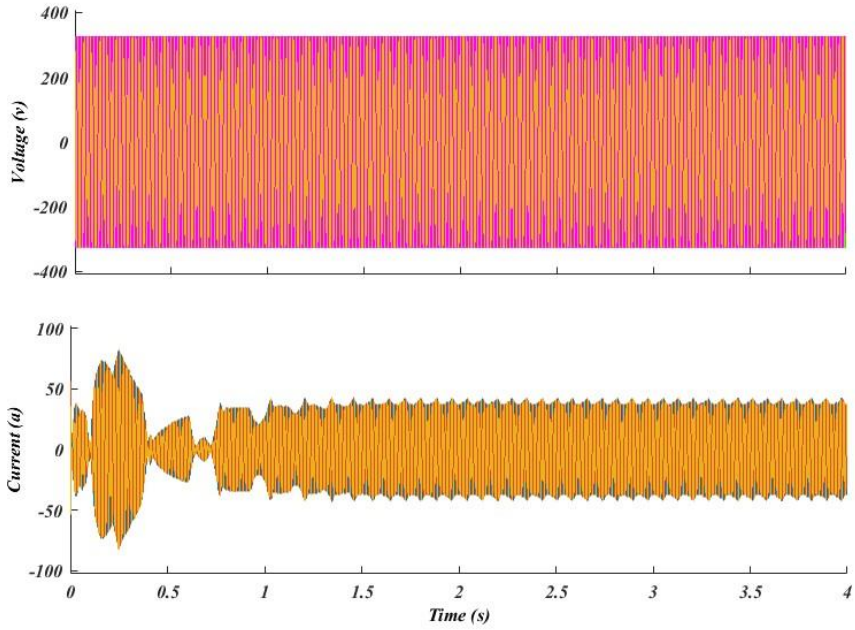

Figure 4.13. Voltage and Current behavior for the AC Bus.

Figure 4.13 illustrates the voltage profile of the AC bus over a specified period. The voltage remains within the acceptable range, demonstrating the stability of the power supply. Consistent voltage levels are crucial for ensuring the proper operation of connected equipment and minimizing the risk of voltage-related issues. The value of the voltage according to the fig is approximately {320v, -320v} in a sinusoidal wave, these voltage results confirm the reliability of the AC bus in delivering a steady voltage supply to the system. Also, the figure presents the current flow through the AC bus during a specific operational scenario. It is clear that the current remains within expected limits, underscoring the bus's ability to handle the connected load. Monitoring current profiles is essential for preventing overload conditions, which can lead to equipment damage or system, downtime. and the value of the current is arranged between {80 A, -80 A} in a sinusoidal wave, these current results confirm that the AC bus is capable of supplying the required current without issues.

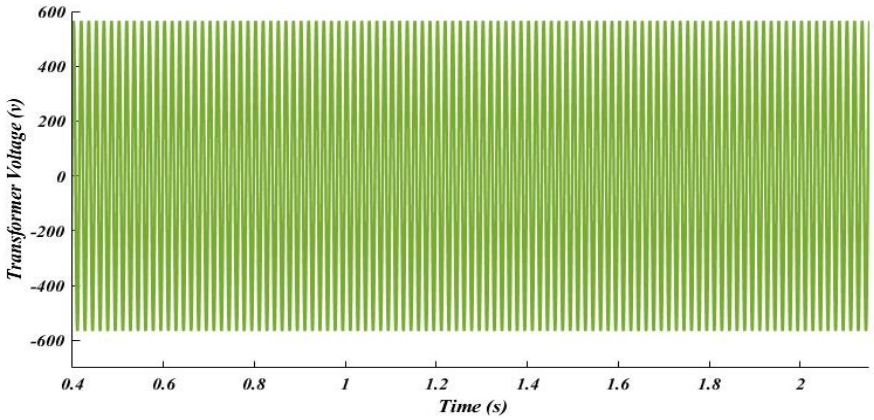

Figure 4.14. Three-phase transformer voltage response.

Figure 4.14 illustrates the dynamic response of the transformer's output voltage to variations in the connected load. Notably, it demonstrates that the transformer maintains a relatively stable output voltage despite fluctuations in the load. This resilience to load changes is a testament to the transformer's robust design and its suitability for applications requiring consistent voltage supply, as seen in Figure 4.14. the voltage changed in sinusoidal waves between {565v, -565 v}. These voltage response results emphasize the transformer's ability to adapt to varying load conditions, which is essential for reliable power distribution.

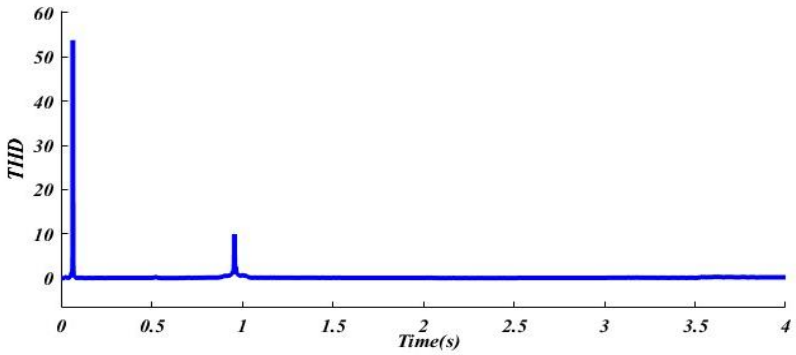

Figure 4.15. Total harmonic distortion of source for RC filter.

Adding a harmonic filter (RC filter) to the output of a three-phase inverter in a PV (Photovoltaic) system can affect the system's performance. The primary purpose of a harmonic filter is to reduce harmonic distortion in the inverter's output waveform. Harmonics are unwanted frequency components that can cause increased losses, electromagnetic interference, and additional stress on the system components. however, the RC filter helps reduce harmonic distortion in the output waveform, resulting in a cleaner sinusoidal waveform. This can lead to better power quality and fewer harmonics injected into the grid as we can see in Figure 4.15 the

value of THD is equal to 0.1712 which is the value that using RC Filter helped to reach it. in addition, many grid codes and standards set limits on the amount of harmonic distortion that can be injected into the grid. By using a harmonic filter, the inverter's output can meet these requirements and ensure compliance with the relevant grid codes. also, harmonics can cause electromagnetic interference (EMI) with other electronic devices, leading to potential communication and operational issues. The harmonic filter helps minimize EMI, improving the overall system reliability while reducing stress on the system components.

The final section of the simulation on MATLAB will explain how to control the speed and torque of the motors that will be used in the electrical laboratory for this project. It should be noted that the addition of electrical generators has been discussed, which enriched this project by solving a number of problems that the system may encounter, such as problems that expose solar cells to malfunction, so alternative solutions were sought. So, we will start by using IM as shown in Figure 4.16. shows the first part which is the simulation of an IM motor with 5.4 HP, 400V, and 1430 rpm characteristics connected with an AC Bus and a three-phase transformer.

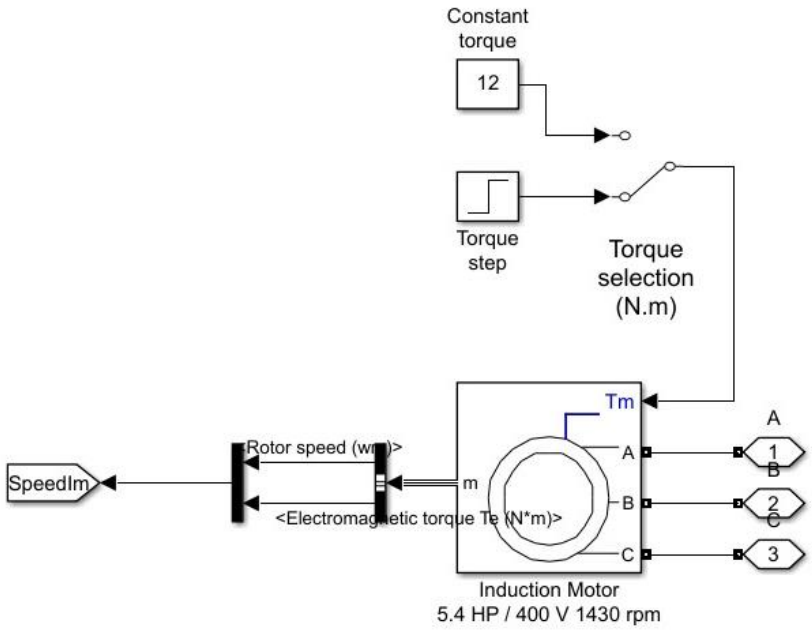

Figure 4.16. Simulation of IM.

Figure 4.17. below describes speed-torque characteristics of the three-phase induction motor, Notably, it illustrates that the motor operates at a near-synchronous speed, highlighting its efficiency at low torque demands. As the load increases, the speed gradually decreases due to the motor's inherent slip, which is a crucial behavior to consider for practical applications. These speed results validate the motor's performance within the specified operating range and provide

insights into its suitability for different applications. It shows that the motor provides maximum torque at startup (near zero speed) and experiences a sharp decline as it approaches synchronous speed. The curve then flattens out, indicating the motor's ability to deliver a relatively constant torque at speeds below synchronous. So, the speed in rad/s is equal to 153.35 which is equivalent to 1464 rpm, and the torque value is equal to 15.64 N.m.

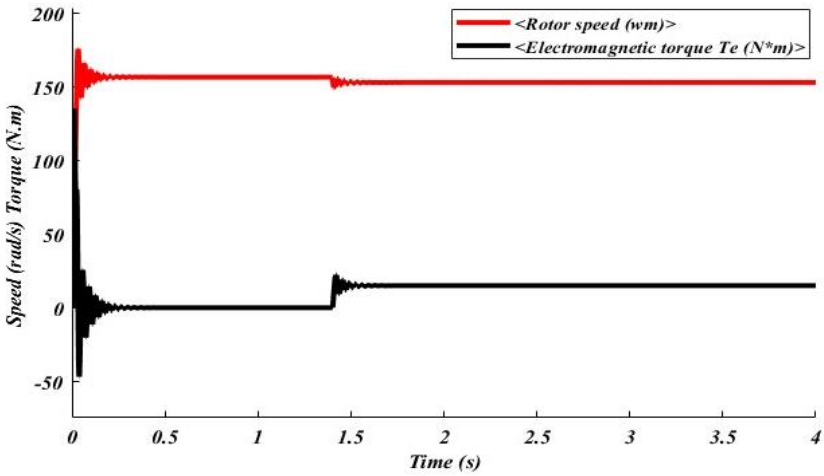

Figure 4.17. Speed and Torque of the IM.

In Figure 4.18. step resistance starter simulated, also known as a stage resistance starter, is an electrical device used to start and control the speed of motors, particularly those with a high starting torque requirement. It's an older method of motor starting that uses resistors to gradually reduce the starting current and torque during motor startup, Change the armature voltage then observe the change in the speed of the motor.

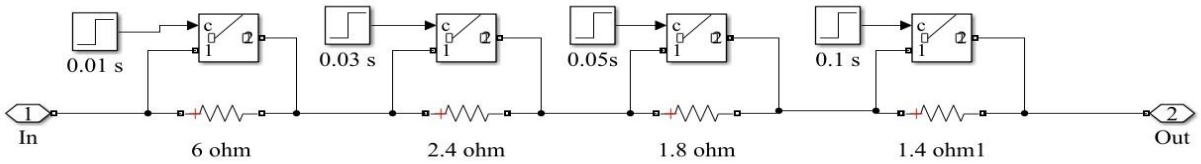

Figure 4.18. Step resistance starter simulation.

Table 4.1. Values of step time and the starter stage resistance.

RE (Ω)	Step Time (s)
6	0.01
2.4	0.03
1.8	0.05
1.4	0.1

When the motor is initially switched on, the circuit connects the motor windings directly to the power supply through a set of resistors. These resistors are selected to limit the current flowing through the motor during startup. The high resistance in the circuit results in a reduced current and torque, allowing the motor to start smoothly without causing a sudden surge in the electrical system, after a predetermined time or once the motor reaches a certain speed, the starter switches to the second step. In this step, some of the resistors are bypassed or switched out of the circuit. This reduces the total resistance and allows more current to flow to the motor. The motor's torque increases as the resistance decreases, aiding in accelerating the engine further. Once the motor has gained sufficient speed and momentum, the starter switches to the fourth step. In this step, all the starting resistors are entirely bypassed, and the motor windings are directly connected to the full supply voltage. The motor runs at its rated voltage and current, achieving full torque and reaching its normal operating speed. The fundamental principle behind the step resistance starter is to gradually reduce the starting current and torque as the motor gains speed. This helps in preventing high inrush currents that could damage the motor windings and the electrical system.

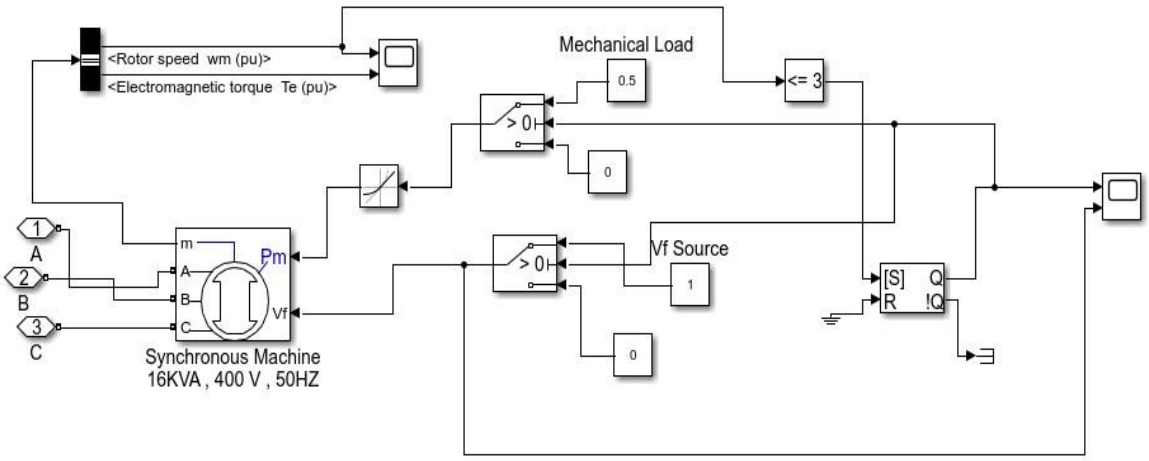

Figure 4.19. Simulation graph of SM.

As shown in Figure 4.19. shows the simulation of an SM motor with 16KVA, 400V, and 1500 rpm characteristics connected with a three-phase transformer voltage source, SM in this system will act like a load-consuming power when it starts to play at many different times, so in the first, the synchronous motor will initially be at rest. As the motor operation progresses starts, speed, and torque will observe transients. These transients are a result of the motor starting from rest and trying to establish synchronous operation.

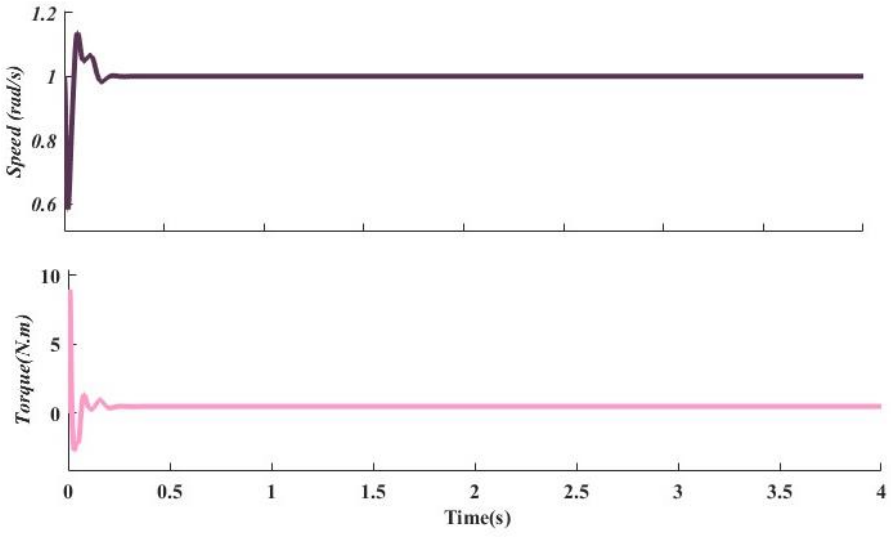

Figure 4.20. Speed and Torque behavior of SM in the system.

As we can see in Figure 4.20, describes the behavior of the Speed and Torque of the motor, the speed of the synchronous motor will gradually ramp up from zero to its synchronous speed. The rate at which the speed increases depends on factors such as the inertia of the motor and the magnitude of the applied torque. Once the motor reaches synchronous speed, it will settle into

a steady-state operation where its speed remains constant.

Here the speed value of the motor is equal to 1 pu which is equivalent to 1000 rpm, and the torque value is equal to 0.48 pu which is equivalent to 48 N.m. In the steady state, the motor will produce a constant torque that balances the mechanical load torque.

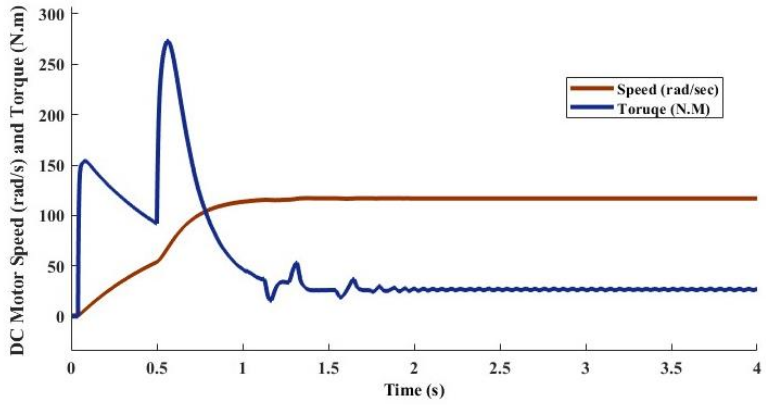

Figure 4.21. Speed and Torque behavior of DC motor in the system.

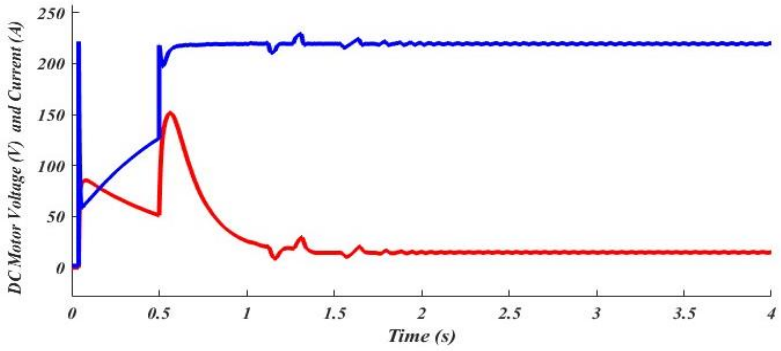

Figure 4.22. Voltage and Current of DC motor graph.

As we can see in Figure 4.21 and Figure 4.22, described the behavior of Speed-Torque and the Voltage- Current respectively, the speed of the DC motor is equal to 116.9 rad/s which is equivalent to 1117 rpm and the torque value is equal to 27.18 N.m, the voltage of DC motor is changing until stable on the value (118-220) V, and the current is changing in a sinusoidal wave until reached approximately the value of 15.3 A.

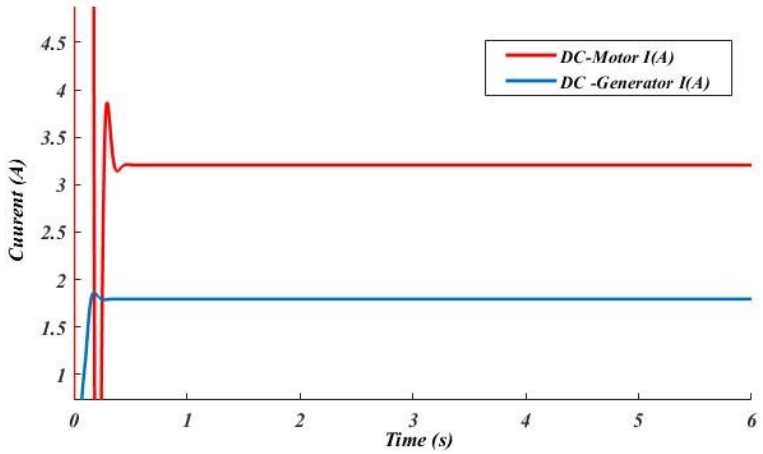

Figure 4.23. current of DC motor and DC generator.

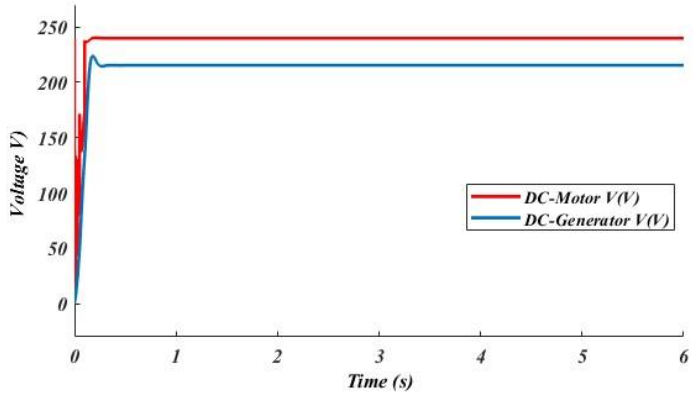

Figure 4.24. Voltage Behavior of DC motor and DC generator.

As we can see in Figure 4.23. and Figure 4.24, described the behavior of current and voltage respectively, the current of the DC motor and DC generator are in the same direction but different in amplitude, and the DC motor and generator current values are approximately 3.21A, 1.794A respectively, and the dc motor and generator voltage values are 240 V, 215.3V respectively.

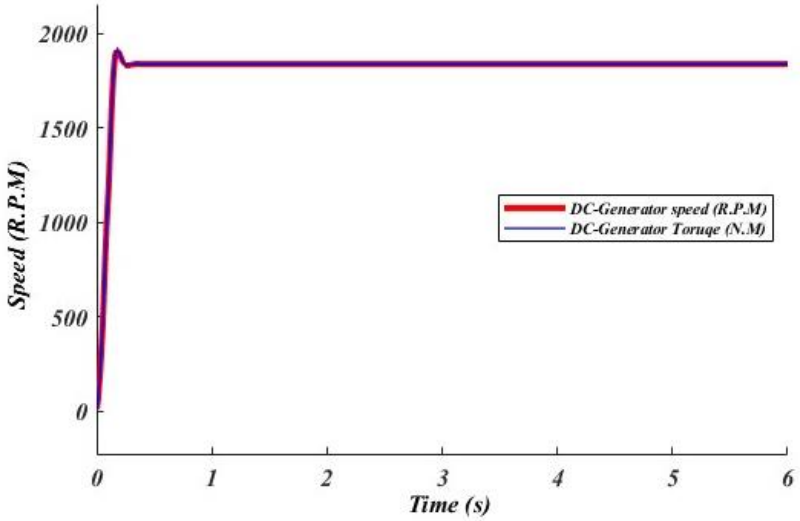

Figure 4.25. Speed response of DC motor and DC generator.

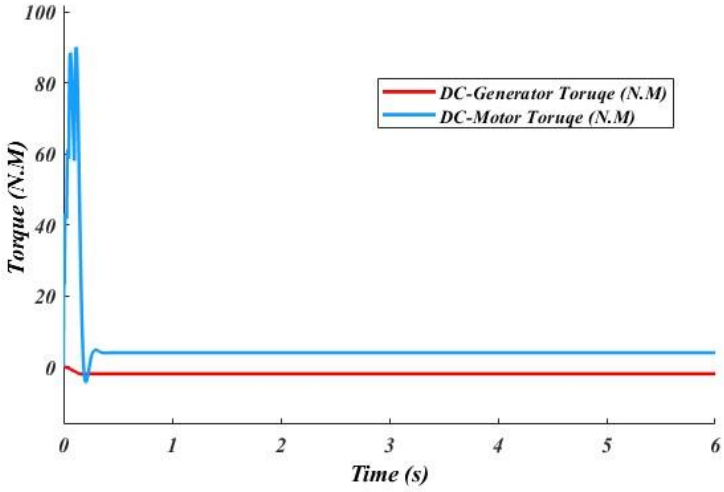

Figure 4.26. Torque of DC motor and DC generator.

The motor and generator operate in a balanced condition where the generated electrical power matches the mechanical power required to turn the motor. The motor's speed stabilizes at a certain value where the mechanical load, losses, and electrical power match. As shown in Figure 4.25. the motor and generator are directly proportional in amplitude and direction, the value of the motor and generator speed is equal to 1837 RPM, but on the other hand, if we look at Figure 4.26. we can see that the torque is inversely proportional to the speed at the same time the motor’s torque is positive and equal to 3.9N.m and the generator’s torque is negative and equal to -2.019 N.m.

But we should remember that the transient response is the behavior of the motor's speed during the transition from one operating point to another. When there's a sudden change in the generator's load or other disturbances, the motor's speed might exhibit a transient response before settling into a new steady state [60].

The transient response time depends on the motor's inertia, control system dynamics, and the type of speed control used.

It's important to note that the speed response of this system depends on various factors, including the motor's characteristics, the generator's characteristics, the control system design, and the mechanical coupling between the motor and the generator. A well-tuned control system can provide accurate and stable speed control, ensuring that the motor's speed responds appropriately to changes in the generator's load.

In the second case of this part it is the connection of a DC motor with an AC synchronous generator, here in Figure 4.27. below there is the simulation of DC motor and AC synchronous generator. When a DC motor is used to drive an AC synchronous generator, the interactions between the two devices can have complex effects on their respective current, voltage, speed, and torque characteristics.

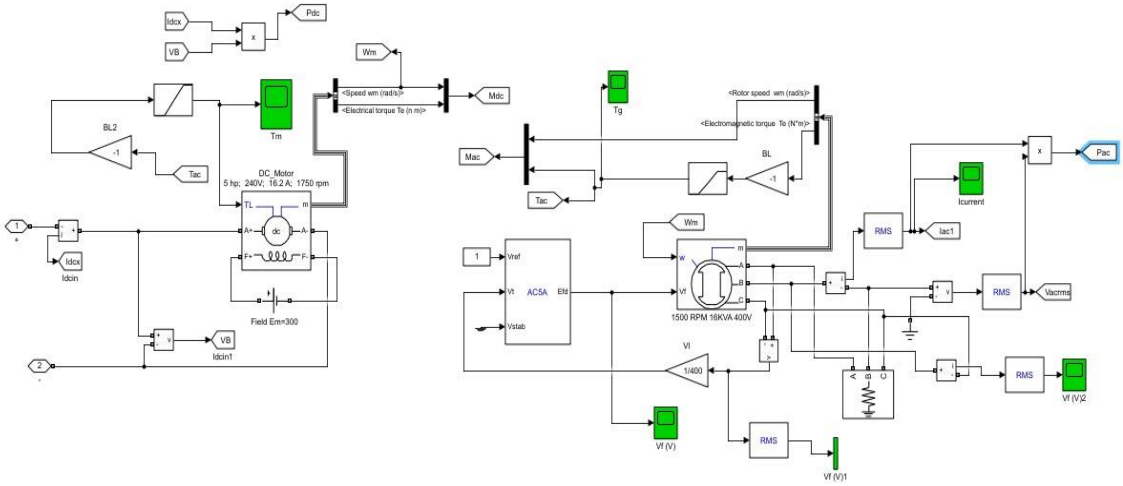

Figure 4.27. Simulation of DC motor and AC synchronous generator.

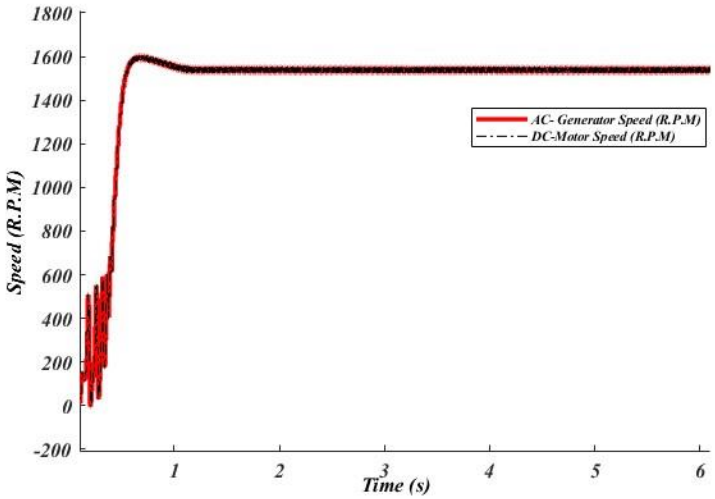

Figure 4.28. Speed response of DC motor and AC synchronous generator.

In a direct-coupling DC motor and synchronous generator system, when the motor's speed is positive, the motor and the generator rotate at the same speed. Therefore:

Speed-M = Speed-G which is equal to 1532 RPM for both. The speed of the DC motor depends on the voltage applied to it and the load it's driving. As the load increases, the motor's speed might decrease if the applied voltage remains constant. The speed of the synchronous generator is determined by the frequency of the AC power supply connected to it. It operates at a fixed speed synchronized with the supply frequency.

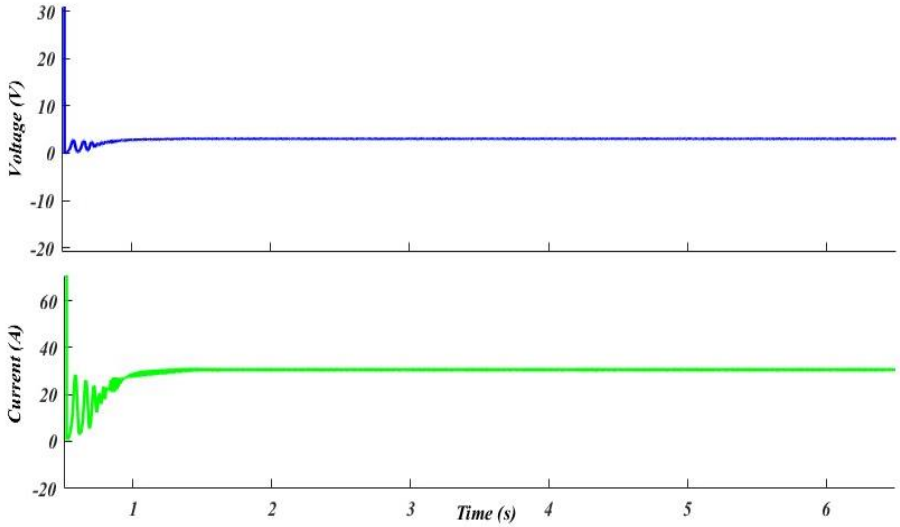

Figure 4.29. Voltage and Current behavior of AC synchronous generator.

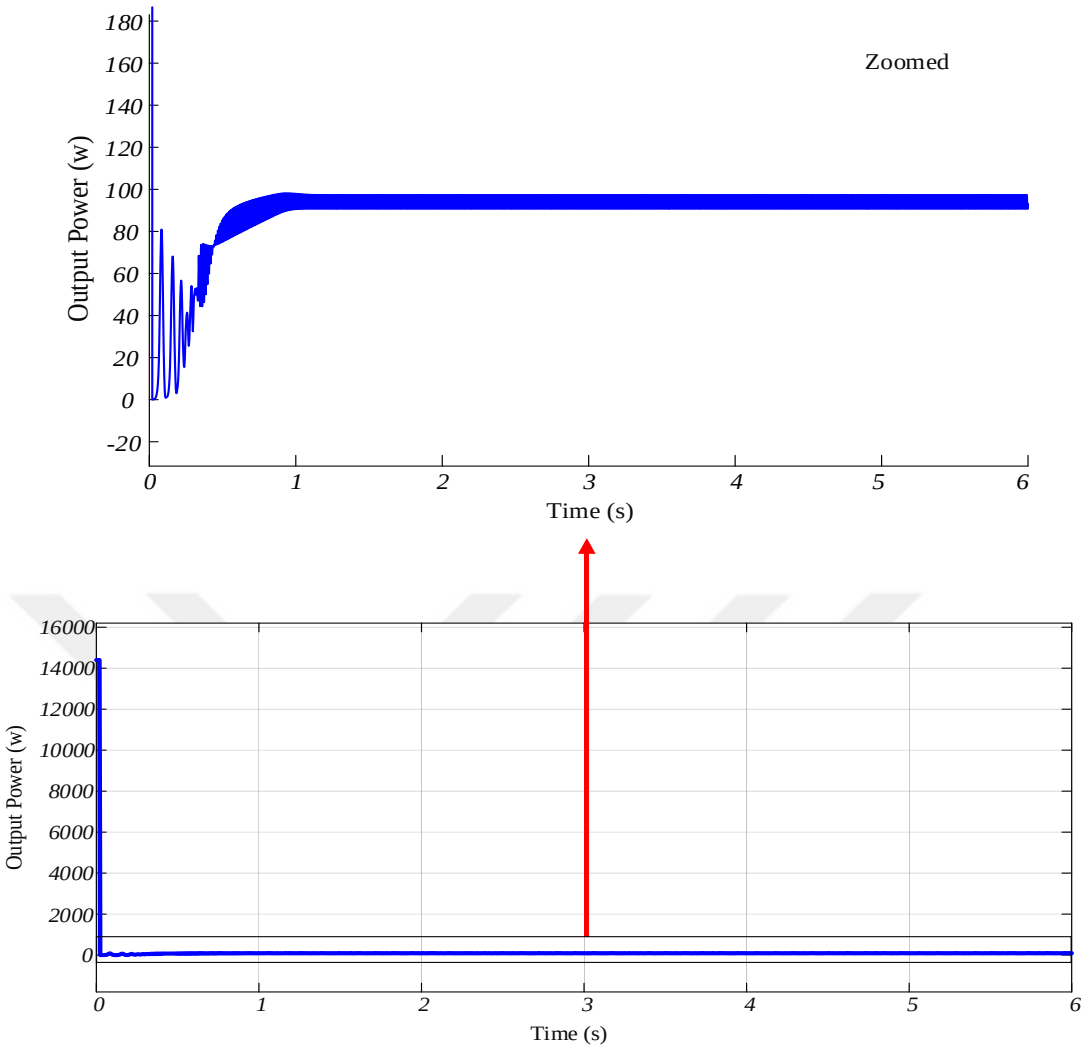

Figure 4.30. Output power of AC synchronous generator.

The expected response of the generator current and voltage is depicted in Figure 4.29, which explains that the synchronous generator's design and rotational speed affect the voltage it produces. It is typically inversely proportional to the generator's rate of rotation, and the synchronous generator's output current is a function of the electrical load that is connected to it, which in this case is 3KW. The coupled load impedance and power needs dictate the current output of the generator. Since the generator's voltage and current are both identical to 3.094V and 30.9A, the predicted AC power should be 90.9, as shown in Figure 4.30. above.

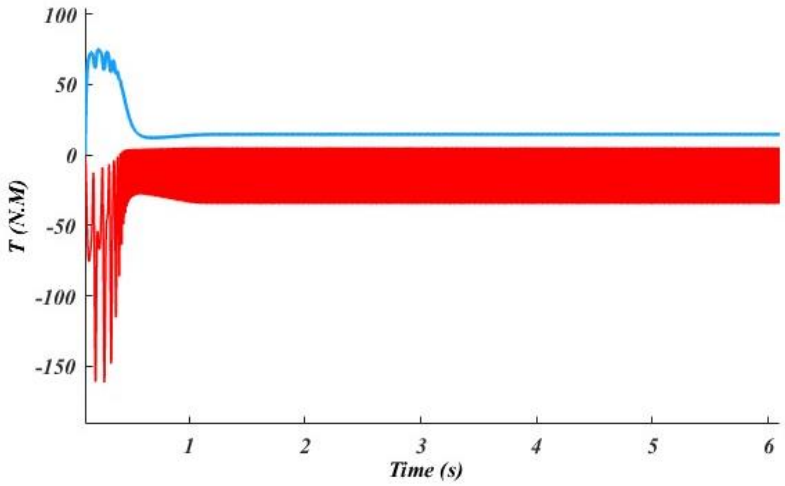

Figure 4.31. Torque response of DC motor and AC synchronous generator.

The torque produced by the DC motor depends on the current flowing through its windings. higher current results in higher torque production, allowing the motor to overcome mechanical resistance. However, the generator's torque depends on the mechanical load connected to it. It produces torque to match the mechanical resistance and the electrical load connected to it [61]. In Figure 4.31. the torque developed by the motor (Tm) is proportional to the armature current, and the torque developed by the generator (Tg) is proportional to the (If) as explained in Chapter 3.2.2, It is seen that the torque value for the motor varies in the average value of 14.42 N.m and the torque value for the generator varies in the average value of 30.76 N.m in the negative direction.

4.2. Performance Analysis:

PV systems are widely used to generate clean energy, and their performance is greatly affected by incident solar radiation. Solar radiation is considered the largest factor that causes differences in energy production due to factors such as cloud cover, shading, and changing weather conditions. In this study, we have analyzed the system’s performance under the influence of trapezoidal radiation and see the effect of trapezoidal radiation shapes on the performance of a photovoltaic system.

We noticed in the simulation part of this chapter that depending on the solar radiation, energy production varies, but it is more productive and highly efficient when the radiation is constant. In this part of the study, we collected solar radiation data with trapezoidal profiles, so that the trapezoidal profiles represent situations in which the incident solar radiation changes quickly. Due to passing clouds or partial shading. As shown in the Figure 4.32.

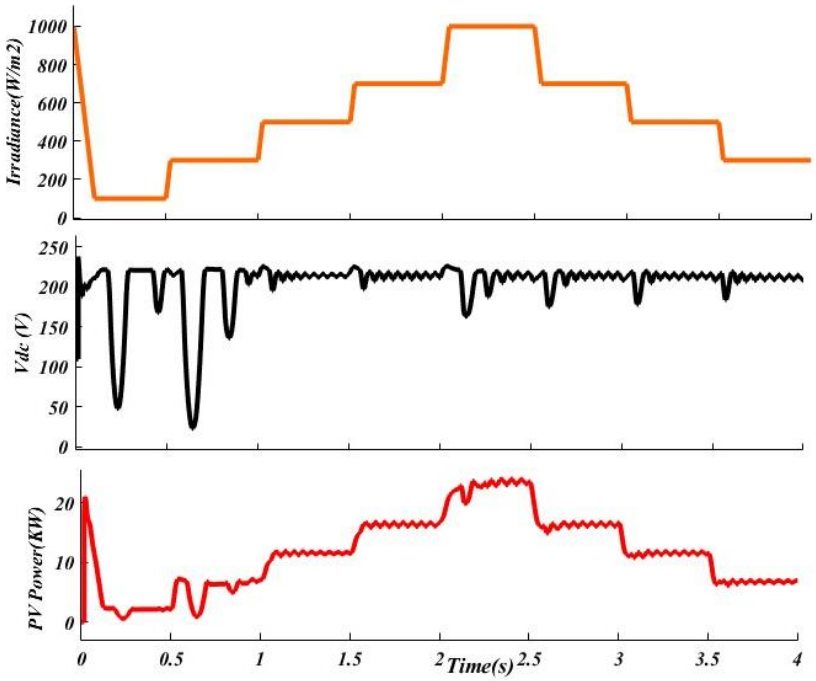

Figure 4.32. Changes in PV power and voltage as a result of changes in solar radiation.

As we can see in the previous Figure, the performance of the photovoltaic system was evaluated using important metrics such as power production, efficiency, and stability under different radiation conditions. The results of the analysis indicated that there is a noticeable effect of trapezoidal radiation on the total energy productivity of the system compared to its productivity at constant radiation, meaning that power generation is less due to the decrease in solar energy input. There is also an impact on the efficiency of the system, as it has decreased compared to fixed radiation. for example, when the solar radiation decreased to 500(w/m2), the amount of energy produced ranged between (11.5-12) KWs, which is much less than the energy that can be produced when the solar radiation is constant and equals 1000 (w/m2), as the amount of energy expected to be produced is 25 KWs.

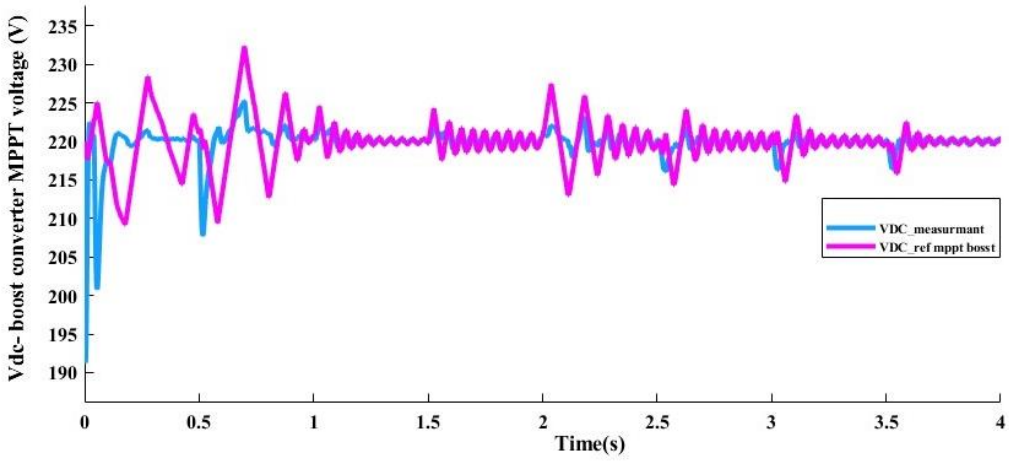

Figure 4.33. Changes in MPPT and Boost Converter Voltage as a result of changes in solar radiation.

Due to fluctuations in the power output of PV panels, the MPPT algorithm continuously adjusts the operating point of the PV system to extract the maximum available power from the panels. When radiation levels change rapidly, the MPPT algorithm needs to respond quickly to track the new maximum power point MPP and this is what we observe in Figure 4.33. These rapid changes make finding the MPP point more difficult, so the MPPT algorithm used must be able to deal with these rapid variations to improve production with high efficiency.

After this analysis, it is very important to understand and mitigate the effects of trapezoidal radiation on system performance, as advanced maximum power point tracking (MPPT) algorithms, energy storage, hybrid photovoltaic energy, and other renewable sources were used to enhance system stability and mitigate efficiency losses during radiation conditions.

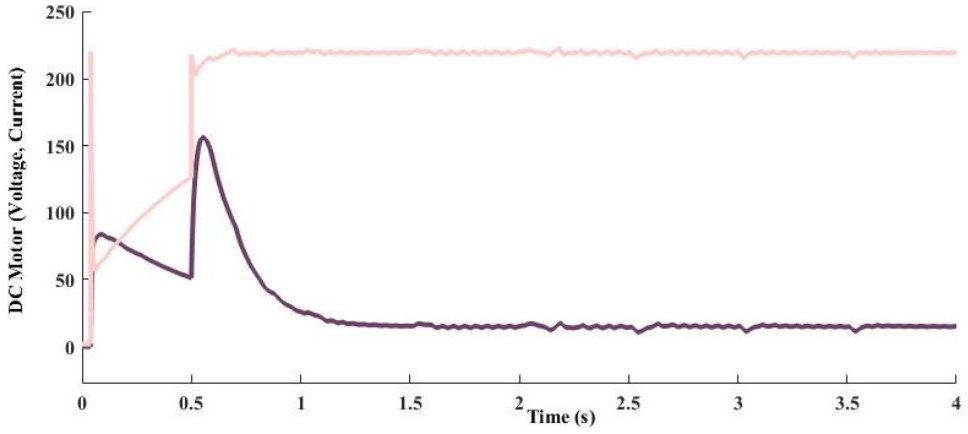

Figure 4.34. The changes in DC Motor Voltage and current.

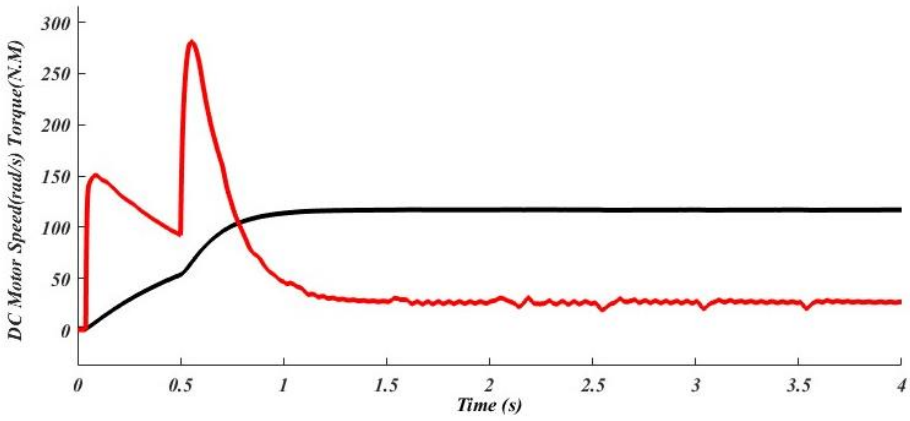

Figure 4.35. The changes in DC Motor Speed and Torque.

As we mentioned previously, trapezoidal radiation causes changes to energy production, and this, in turn, may affect the behavior of the loads associated with the system, among these effects that may occur to connected devices to the system, due to the decrease in power available to meet all loads, the behavior of the loads and their sensitivity will be affected as it shown in Figure 4.34. and Figure 4.35. The sensitivity of some loads, such as lighting, electronic control devices, and others, may be less than sensitive equipment such as computers, manufacturing processes, and others that may be exposed to interruptions or require backup power during a sudden power outage.

But since the system is a network-connected system, the excess electricity generated by the system on a high sunny day is usually exported to the network, and on foggy days filled with clouds, the production of the photovoltaic system decreases, so the load may depend more on the electricity provided by the network.

In addition, it is also worth mentioning the use of the inverter in these systems and its importance, as some inverters connected to the network are designed with features to mitigate the effects of rapid changes in radiation. It can smooth out fluctuations and provide some stability to the AC output and conduction of loads. Also to reduce this problem, in some cases, energy management systems can be used to prioritize loads during periods of low PV system production. So we can get rid of unnecessary loads to maintain the system's stability to some extent.

5. CONCLUSION AND SUGGESTION FOR FUTURE WORKS

This thesis has investigated the convolution of developing and accessing a sustainable solar power supply system designed specifically to meet the energy demands of an electrical machine laboratory. It has established a strong foundation for sustainable energy supply and management through an extensive examination of solar technologies, DC-DC converters, three-phase inverters, as well as the integration of various loads and generators. Whereas the PV grid system created for this operation is thought to be the most effective approach to save money, it was suggested as a source to generate electricity for lab equipment equivalent to the design of 25 kilowatts connected to the grid while putting this system into place through a collection of photovoltaic panels as a solar photovoltaic power plant to meet the need for electricity. We reached the maximum power generation capacity thanks to the MPPT controller. Based on the electrical loads used inside the laboratory as well as the various operating hours, it is anticipated that this research will meet all of the laboratory's electrical capacity needs. In this thesis, and through practical application of the MATLAB program, we were able to achieve the goal of operating different types of loads and electrical machines (DC Motor, DC Load, RLC Load, IM, Synchronous Motor) with multiple capacities (3.82 KW, 2 KW,5 KW, 4 KW, 16 KVA) respectively taking into account the different operating times and the environmental and geographical conditions that may occur.

This study also included problems that may arise in the system in light of different environmental conditions and the most important factor affecting the productivity of solar panels, which is solar radiation. Therefore, we conducted a mini-study of the deviant radiation that may occur due to fog, fog, and other climatic conditions and its significant impact on productivity. The solar panels and the electrical capacity that will be collected under these conditions and whether it will be sufficient to operate all the loads in the laboratory. As a result, we analyzed the importance of using some solutions and strategies to address the effects of trapezoidal radiation, such as advanced MPPT algorithms, multiple MPPTs, energy storage, energy management, and inverters. Advanced. Optimized panel placement: Optimize the placement and orientation of PV panels to minimize shading and maximize solar exposure, energy efficiency, and grid interaction. By using these strategies, we can help our system not struggle with energy production at all.

The investigation into photovoltaic technologies underscored their pivotal role in harnessing clean RSs. The detailed examination of DC-DC converters provided valuable insights into

optimizing power extraction and conversion efficiency, thereby enhancing the system's overall performance. The incorporation of three-phase inverters demonstrated the significance of seamless integration with existing power systems and the potential to contribute surplus power back to the grid. Our exploration extended beyond theoretical concepts into practical implementation. The consideration of different load types within the machine laboratory context highlighted the system's adaptability and ability to meet varying energy demands. Moreover, the evaluation of generators in conjunction with the photovoltaic system offered a comprehensive understanding of hybrid energy scenarios, enhancing the system's reliability and resilience. In terms of performance analysis, the conducted experiments and simulations validated the effectiveness of the designed system. The energy output, voltage regulation, and transient responses demonstrated the successful alignment of the renewable photovoltaic power supply system with the operational requirements of the machine laboratory. These findings confirm the system's potential to significantly contribute to sustainable energy practices and reduce the institution's carbon footprint. While the thesis focused on the specific context of a machine laboratory, the principles and methodologies presented herein can serve as a template for the integration of renewable energy systems in various industrial and educational settings. The interdisciplinary nature of this work reinforces the collaboration between engineering, energy management, and environmental stewardship. By using generators, this study was able to be completed more successfully. This addition can serve as a backup power source, which is crucial in ensuring that the electrical laboratory always has access to electricity, even when there are outside factors affecting the solar panel's energy output. The system can be made more effective and sustainable by incorporating energy-saving technologies, which can also help lower energy expenditures and usage.

Suggestions for Future Work:

While this thesis has made significant strides in the design and analysis of a renewable photovoltaic power supply system tailored for a machine laboratory, there are several promising avenues for future research and development that can build upon the foundations laid here.

- Dynamic Load Management and Energy Storage Integration (ESI):

Future research could focus on developing sophisticated load management strategies that dynamically allocate generated energy to various laboratory equipment based on real-time demand. Additionally, investigating the seamless integration of energy storage solutions, such as advanced battery technologies, could lead to optimized energy utilization, improved system resilience, and enhanced load balancing capabilities.

- Optimal Sizing and Configuration of Hybrid Systems:

Extending the research to encompass hybrid energy systems that incorporate other renewable sources like wind or hydro could provide a holistic solution for sustainable energy generation. Exploring optimal sizing, configuration, and control strategies for such hybrid setups can contribute to more efficient utilization of available resources and enhanced system reliability.

- Advanced Control Techniques for Grid Interaction:

Investigating advanced control techniques for grid interaction would enable the renewable power supply system to seamlessly integrate with smart grid frameworks. Techniques such as predictive control, demand response algorithms, and power quality enhancement strategies could facilitate bidirectional power flow and effective participation in demand-side management programs.

- Long-term Performance Monitoring and Adaptive Control:

Conducting a comprehensive long-term performance study of the implemented system in real-world scenarios could yield valuable insights into its adaptability to changing environmental conditions and load patterns. The research focused on developing adaptive control algorithms that can dynamically adjust system parameters based on real-time data could enhance overall efficiency and sustainability.

- Lifecycle Analysis and Economic Viability Assessment:

Future research could extend beyond technical aspects to encompass a comprehensive lifecycle analysis that evaluates the environmental, economic, and social impacts of the renewable energy system. This could involve quantifying carbon footprint reduction, assessing payback periods, and determining the overall economic viability of the proposed solution.

- Integration with Emerging Technologies:

Exploring the integration of emerging technologies such as blockchain for energy trading, artificial intelligence for predictive maintenance, and edge computing for real-time decision-making could open up new avenues for enhancing the system's performance, resilience, and user interaction.

In conclusion, while this thesis has provided a comprehensive exploration of the design, operation, and performance analysis of a renewable photovoltaic power supply system for a machine laboratory, the future research directions outlined above hold the promise of advancing this field even further. By addressing these areas, researchers and practitioners can contribute to the evolution of sustainable energy solutions, impacting both academic environments and broader industrial applications.

REFERENCES

[1] E. Muljadi, and R. Taylor, "PV water pumping with a peak power tracking using a simple six-step square wave inverter," IEEE Trans. Ind. National Renewable Energy Laboratory. Sept. 1996.

[2] R. Konishi, and M. Takahashi, "Optimal Allocation of Photovoltaic Systems and Energy Storages in Power Systems Considering Power Shortage and Surplus," IEEE Trans. 2014.

[3] A. Asia, A. Sharata, and A.A. Alkhrbash, “Modeling and simulation of a hybrid power system for Hospital in Sabratha, Libya via HOMER software," IEEE 2nd International Maghreb Meeting of the Conference on Sciences and Techniques of Automatic Control and Computer Engineering (MI-STA), Libya, May. 2022.

[4] N. David, A.A. Opeyemi, M.H. Khooban, and F. Blaabjerg, " Solar Power System: A Viable Renewable Energy Source for Nigeria, " Quest Journal of Electronics and Communication Engineering Research(JECER), vol. 1 pp: 10-19, Sep. 2013.

[5] M. Rakhshan, N. Vafamand, M.H. Khooban, and F. Blaabjerg, "Maximum Power Point Tracking Control of Photovoltaic Systems: A Polynomial Fuzzy-Model-Based Approach, " IEEE Journal of Emerging and selected topics in power electronics, vol. 6, no. 1, Mar. 2018.

[6] F.E. Tahiri, K. Chikh, A. Saad, M. Khafallah, and D. Breuil, "Modeling and performance analysis of a solar PV power system under irradiation and load variations, " IEEE Journal of 14th International Multi-Conference on Systems, Signals & Devices (SSD), Mar. 2017.

[7] M. Srinivasa Rao, and M. Agrawal, " Performance Analysis of Partial Shading on Solar Photovoltaic System under Aluminum Reflectors, " IEEE International Students' Conference on Electrical, Electronics and Computer Science (SCEECS), May. 2020.

[8] A. S. Al-akayshee, Oleg N. Kuznetsov, and I. Alwazah, " Challenges and Obstacles Facing the Growth of Using a Solar Energy in Iraq,” IEEE Conference of Russian Young Researchers in Electrical and Electronic Engineering (ElConRus), April, 2021.

[9] V. Deshko, I. Bilous, I. Sukhodub, N. Buyak, and T. Boiko, " Energy Generation and Feasibility Evaluation of Installation of Solar Photovoltaic Plant for Public Buildings,” IEEE 63rd International Scientific Conference on Power and Electrical Engineering of Riga Technical University (RTUCON), Dec 2022.

[10] H. Bevrani, F. Daneshfar, and T. Hiyama, " A New Intelligent Agent-Based AGC Design with Real-Time Application,” IEEE Transactions on Systems, Man, and Cybernetics

Applications and Reviews, vol .42, no.6, Nov 2012.

[11] Sh. S. Kewte, and Sh. G. Kewte, " Analysis of temperature effect, incidence angle, fill factor, air mass and pollution factor of solar power generation with rooftop system by monocrystalline solar panel," AIP Conference Proceedings vol. 2494, Oct 2022.

[12] U. Prasatsap, N. Nernchad, and Ch. Termritthikun, " Comparison of Control Configurations and MPPT Algorithms for Single-Phase Grid-Connected Photovoltaic Inverter," Advances in Electrical and Computer Engineering, Vol. 23, No. 2, May 2023.

[13] I. Isknan, A. Asbayou, A. H. Adaliou, A. Ihlal, and L. Bouhouch, " Comparative study and simulation of advanced MPPT control algorithms for a photovoltaic system," Indonesian Journal of Electrical Engineering and Computer Science, vol. 30 No.1 April 2023.

[14] Y. El Aidi Idrissi, Kh. Assalaou, L. Elmahni, and El. Aitiaz, " New improved MPPT based on artificial neural network and PI controller for photovoltaic applications," International Journal of Power Electronics and Drive Systems (IJPEDS), vol. 13, No. 3, Sep 2022.

[15] A. K. Podder, N. K. Roy, and H. Roy Pota, " MPPT methods for solar PV systems: a critical review based on tracking nature," IET Renewable Power Generation, vol. 13, No. 10, May 2019.

[16] V. Karthikeyan, S. Rajasekar, V. Das, P. Karuppanan, and A. K. Singh, " Grid-Connected and Off-Grid Solar Photovoltaic System," Smart Energy Grid Design for Island Countries, pp125-175, April 2017.

[17] K. Ik. Nadine, and P. M. Moses, "Grid-connected solar PV with Active Power Filter Services for Power Quality Improvement," IEEE PES/IAS Power Africa, Sep 2022.

[18] Y. Ice, M.S. Mamis, A. Bugutekin, and M.I. Gursoy, " Photovoltaic Panel Efficiency Estimation with Artificial Neural Networks: Samples of Adiyaman, Malatya, and Sanliurfa, " Hindawi International Journal of Photoenergy, April. 2019.

[19] M.S. Mubarak, A. E. ELGebaly, and S.M. Allam, " Assessing the Effect of Shading on Centralized and Decentralized Large Scale Stand-alone PV Power Plant Feeding Industrial Area in Egypt, " IEEE 22nd International Middle East Power Systems Conference (MEPCON), Egypt, 2021.

[20] S. Mollik, S.H. Rafin, A. Al Mamun, A.M.M. Irfeey, A. S. Soliman and O.A. Mohammed, " Improved Performance of a Two-Stage Converter Topology Using Incremental Conductance-Based MPPT Design for Grid-Tied PV Systems, " IEEE SoutheastCon, USA, May.2023.

[21] C. Chen, Z. Chen, H. S. Rizi, and A. Q. Huang, " Comparative Study of 100kW Three-

Level Bidirectional DC-DC Converters for Battery Storage Integration with 1500V PV Inverter, " IEEE Applied Power Electronics Conference and Exposition (APEC), 2023.

[22] P. Sanjeevikumar, G. Grandi, P.W. Wheeler, F. Blaabjerg, and J. Loncarski, "A Simple MPPT Algorithm for Novel PV Power Generation System by High Output Voltage DC-DC Boost Converter, " IEEE 24th International Symposium on Industrial Electronics (ISIE), June 2015.

[23] D. Sivaraj, and M. Arounassalame, "Fractional order PI controller for High gain boost converter," IEEE International Conference on Recent Trends in Electrical, Control, and Communication (RTECC), vol. 3, Mar 2018.

[24] H. Hu1, M. Zhu1, J. Zhang, M. Liu, and Xu Cai, "Current-Sensorless MPPT with DC-DC Boost Converter for Photovoltaic Battery Chargers," IEEE 12th Energy Conversion Congress & Exposition - Asia (ECCE-Asia), 2021.

[25] A. N. Akpolat, Y. Yang, F. Blaabjerg, E. Dursun, and A. E. Kuzucuoğlu, "Design Implementation and Operation of an Education Laboratory-Scale Microgrid," IEEE Department of Electrical and Electronics Engineering, Faculty of Technology, Marmara University, April 2021.

[26] Sumedha Sengar, "Maximum Power Point Tracking Algorithms for Photovoltaic System: A Review," IEEE International Review of Applied Engineering Research, vol. 4, pp.147-154, Feb 2014.

[27] M. Dakanalis, I. Roditis, E. Koutroulis, and F. Kanellos, "Three-Phase Multiport DC-AC Inverter for Interfacing Photovoltaic and Energy Storage Systems to the Electric Grid," IEEE Journal of Emerging and Selected Topics in Industrial Electronics, May 2023.

[28] B.S. Mahdi, M. S. Ali, N. Suleiman, H. Hizam, S. Shafie, and M.A. Shehab, "Comparative Study of DC/AC Inverter Control Techniques for Three Phase Grid Connected PV System," TEM Journal. Vol. 11, Issue 3, Aug 2022.

[29] H. Sridharan, and S. Ramalingam, "Design and implementation of two phase interleaved voltage source inverter for PV applications," IIUM Engineering Journal, Vol. 20, No. 2, Dec 2019.

[30] Ahmed, Sh. P. Biswas, Md. Anower, Md. Rabiul Islam, S. Mondaland S. M. Muyeen, "A Hybrid PWM Technique to Improve the Performance of Voltage Source Inverters," IEEE Access, vol.11, Jan 2023.

[31] N. Mandal, B. K. Dey, A. Paul and A. Bhattacharjee, "A Novel Three-Phase Five-Level Inverter Control and Its Performance Analysis for a Grid-Connected Solar PV Power System," in chapter 75 of Advances in Energy Research, Vol 2, Mar 2020.

[32] A. B. Asiedu, and R. A. Ofosu, "Cascaded Loop Control of a Three-Phase Grid-Connected PV Inverter System," Ghana Journal of Technology, Vol. 5, No. 1, pp. 40 – 53, 2020.

[33] D.M. Shukla, and Dr. N. Zaveri, "Simulation of SVPWM Based 3-level H-bridge Inverter Used in Grid Connected PV System," CUE 2018 on Green Energy for Sustainable Development, Oct 2018.

[34] R., Ak, A, Rahmatullah, and N.F.O. Serteller, "SMC Controller Design for DC Motor Speed Control Applications and Performance Comparison with FLC, PID and PI Controllers," Nagar, A.K., Singh Jat, D., Mishra, D.K., Joshi, A. (eds) Intelligent Sustainable Systems. Lecture Notes in Networks and Systems, vol 579. Springer, Singapore, Jan. 2023

[35] I. Sefa, H. Komurcugil, S. Demirbas, N. Altin, and S. Ozdemir, "Three-phase three-level inverter with reduced number of switches for stand-alone PV systems," IEEE 6th International Conference on Renewable Energy Research and Applications (ICRERA), Dec 2017.

[36] I S.G. Malla, C.N. Bhende and S. Mishra, "Photovoltaic based Water Pumping System," IEEE International Conference on Energy, Automation and Signal, Feb 2012.

[37] P. R. Palmer, and M. S. Abu Khaizaran, "The Series connection of IGBTs in a Current Source Inverter," IEEE International Journal of Power Electronics and Drive System (IJPEDS), vol. 9, No. 3, Sep 2018.

[38] M. Noor, N. Rosmizi, N. Aminudin, and A.H Faranadia, "Investigation of Passive Filter Performance on Three Phase DC into AC Converter," IEEE 6th International Conference on Renewable Energy Research and Applications (ICRERA), Dec 2017.

[39] B. Vahidi, and M. R. Bank TAVAKOL, "Simulation of Ward Leonard Test Set and Induction Motor on MATLAB for Teaching Performance Characteristics of Induction Motor to Undergraduate Students," Department of Electrical Engineering Amirkabir University of Technology Tehran, April 2008.

[40] S. Mohamed, and S. Salem, "Study of wind turbine based self-excited induction generator under nonlinear resistive loads as a step to solve the Egypt electricity crisis," Science Direct Electrical Power and Machines Department, Vol.51, pp (1-11), April, 2016.

[41] B. Gecer, O. Tosun, H. Apaydin, and N.F.O. Serteller, "Comparative Analysis of SRM, BLDC and Induction Motor Using ANSYS/Maxwell," International Conference on Electrical, Computer, Communications and Mechatronics Engineering (ICECCME), Oct.2021

[42] K. Klimkowski, M. Gwoździewicz, and M. Dybkowski, "Analysis of the Vector

Control Algorithm for New Concept of Permanent Magnet Synchronous Machines in Wide Speed Range," IEEE International Symposium on Electrical Machines (SME), July 2017.
[43] T. Tudorache, and V. Manoliu, "Finite Element Analysis of Inverter-Fed Inverse Construction Synchronous Motors," IEEE International Symposium on Fundamentals of Electrical Engineering (ISFEE), April 2020.
[44] A. M. Omara, M. K. El-Nemr, and E. M. Rashad, "Real time implementation of high performance closed loop embedded control system for interior permanent magnet motors," IEEE International Conference on Electrical Machines and Systems (ICEMS), Jan 2014.
[45] Sahana M, Sachin. Angadi, and A.B. Raju, "Speed Control of Separately Excited DC Motor Using Class a Chopper," IEEE International Conference on Circuits, Controls, Communications and Computing (I4C), Oct 2017.
[46] Dr.R. Nagarajan, S. Sathishkumar, K. Balasubramani, C. Boobalan, S. Naveen, and N. Sridhar, "Chopper Fed Speed Control of DC Motor Using PI Controller," IEEE Journal of Electrical and Electronics Engineering (IOSR), May 2016.
[47] N. Jeddi, N. Ouasli, L. El Amrou, and F. Tadeo, "Speed Control of a Separately-Excited DC Motor Powered by Photovoltaic Energy," IEEE The Sixth International Renewable Energy Congress (REC), May 2015.
[48] Albinus bernard, "Speed control of separately excited DC motor using artificial intelligent approach," A project report submitted in partial fulfillment of the requirement for the award of the Master of Electrical Engineering, Jan 2013.
[49] A. M. Hemeida, Y. A. Mobarak, and M. R. Mousa, "Power Systems Stabilization Using SVC and STATCOM," International Review on Modelling and Simulations (I.RE.MO.S.), Vol. 3, N.5, Oct 2010.
[50] C. Ghita, and I. Trifu, "Aeolian synchronous generator with conical rotor," IEEE 7th international symposium on advanced topics in electrical engineering (ATEE), Jul, 2011.
[51] M.K. Al-Mosawi, C. Beduz, and Y. Yang, "Construction of a 100 kVA High Temperature Superconducting Synchronous Generator," IEEE Transactions on applied superconductivity, vol. 15, NO. 2, June 2005.
[52] D. An. Pham, F. C Nollet, N. Essounbouli, and A. Hamzaoui, "Voltage and Frequency Regulation for Wound Rotor Synchronous Generator in Micro Hydro Power Plants with Real-Time Implementation," IEEE International Renewable and Sustainable Energy Conference (IRSEC), Sep 2018.
[53] A. A. Reddy, and S. S. Bhat, "Modeling of Dual Excited Synchronous Generator with slip frequency excitation," IEEE First International Conference on Smart Technologies for

Power, Energy and Control (STPEC), Dec 2020.

[54] Y. Hang Hu, An Ning Yu, and L. M. Wang, “A Novel Loading Method for Electric Motors Using AC Synchronous Generators,” IEEE International Conference on Computer Science and Electronics Engineering, April 2012.

[55] P. R. Sarkar; A. F. Minai, M. S. Bhaskar, R. K. Pachauri, and Sashikant, “Examination of MPPT Algorithm on Three Step DC-DC Converter,” IEEE 9th Uttar Pradesh Section International Conference on Electrical, Electronics and Computer Engineering (UPCON), Dec 2022.

[56] Akpolat, A. N., Dursun, E., and Kuzucuoğlu, A. E., “Deep Learning-Aided Sensorless Control Approach for PV Converters in DC Nanogrids,” IEEE Access, vol. 9, pp. 106641-106654, Jul. 2021, doi: 10.1109/ACCESS.2021.3100857.

[57] M. El malah, A. Ba-Razzouk, M. Guisser, E. Abdelmounim, M. Madark, and H. Bahri, “Nonlinear Control for Three Phase Single Stage Grid Connected PV System,” IEEE Renewable Energies, Power Systems & Green Inclusive Economy (REPS-GIE), Oct 2018.

[58] Zh. Liu, B. Zhang, and K, Zhou, “Fractional-order Phase Lead Compensation for Multi-Rate Repetitive Control on Three-phase PWM DC/AC Inverter,” IEEE Applied Power Electronics Conference and Exposition (APEC), Oct 2016.

[59] Md. H. Bayazid, T. Rahman, M. Akter, Md. Moniruzzaman, E. A. Mainul, R. K. Nondy, S. M. R. Karim, and S. H. Sifat, “Hybrid Switching Control-Based DC to AC Inverter for Microgrid Using Renewable Energy Sources 1Department of Electrical and Electronic Engineering, International University of Business Agriculture and Technology, July 2023.

[60] M.S. Widyan, A. I. Al Tarabsheh, I. Y. Etier, and R. E. Hamish, “Transient Analysis and Output Characteristics of DC Motors Fed by Photovoltaic Systems,” Jordan Journal of Mechanical and Industrial Engineering (JJMIE), Volume 4, No 1, pp. [193 – 204], Jan 2010.

[61] Yıldırım Özüpak, “Design and Analysis of a Synchronous Generator Using Finite Element Method Based ANSYS-Maxwell,” International Journal of Engineering & Applied Sciences (IJEAS), Vol.14, pp. [66-76], Oct 2021.

CURICULUM VITAE

Afiaa Imad Nanish received a B.Sc. degree in Electrical Engineering in 2017. She is currently pursuing her master's degree at Marmara University, Istanbul, Turkey. She holds a Bachelor's degree in Electrical Engineering, from the Department of Energy, from the College of Engineering and Technology, An-Najah National University, Nablus, Palestine. From December 2019. She had worked in the field of electrical engineering as a machine engineer at a brick factory, also worked in the field of designing electrical networks for homes, and worked for a short period for the municipality in the electrical planning department for homes and commercial establishments. her current research interests include smart networks in home construction, control of DGs systems, elevator systems and electronics, and manufacturing electronic circuits in addition to renewable energy systems, and PV systems.

Appendix

MPPT P&O Algorithm code

function D = PandO(Param, Enabled, V, I)

% MPPT controller based on the Perturb & Observe algorithm.

% D output = Reference for DC link voltage (Vdc_ref)
%
% Enabled input = 1 to enable the MPPT controller
% V input = PV array terminal voltage (V)
% I input = PV array current (A)
%
% Param input:
Dinit = Param(1); %Initial value for Vdc_ref
Dmax = Param(2);   %Maximum value for Vdc_ref
Dmin = Param(3);   %Minimum value for Vdc_ref
deltaD = Param(4); %Increment value used to increase/decrease Vdc_ref
%

persistent Vold Pold Dold;

dataType = 'double';

```
D if isempty(Vold)
    Vold=0;
    Pold=0;
    Dold=Dinit;
end
P= V*I;
dV= V - Vold;
dP= P - Pold;


if dP
    if dP < 0
        if dV < 0
            D = Dold + deltaD;
        else
            D = Dold - deltaD;
        end
    else
        if dV < 0
            D = Dold - deltaD;
        else
            D = Dold + deltaD;
        end
    end
else D=Dold;
end


if D >= Dmax | D<= Dmin
    D=Dold;
```

```
end


Dold=D;
Vold=V;
Pold=P;
```